# YAZOO/KEES

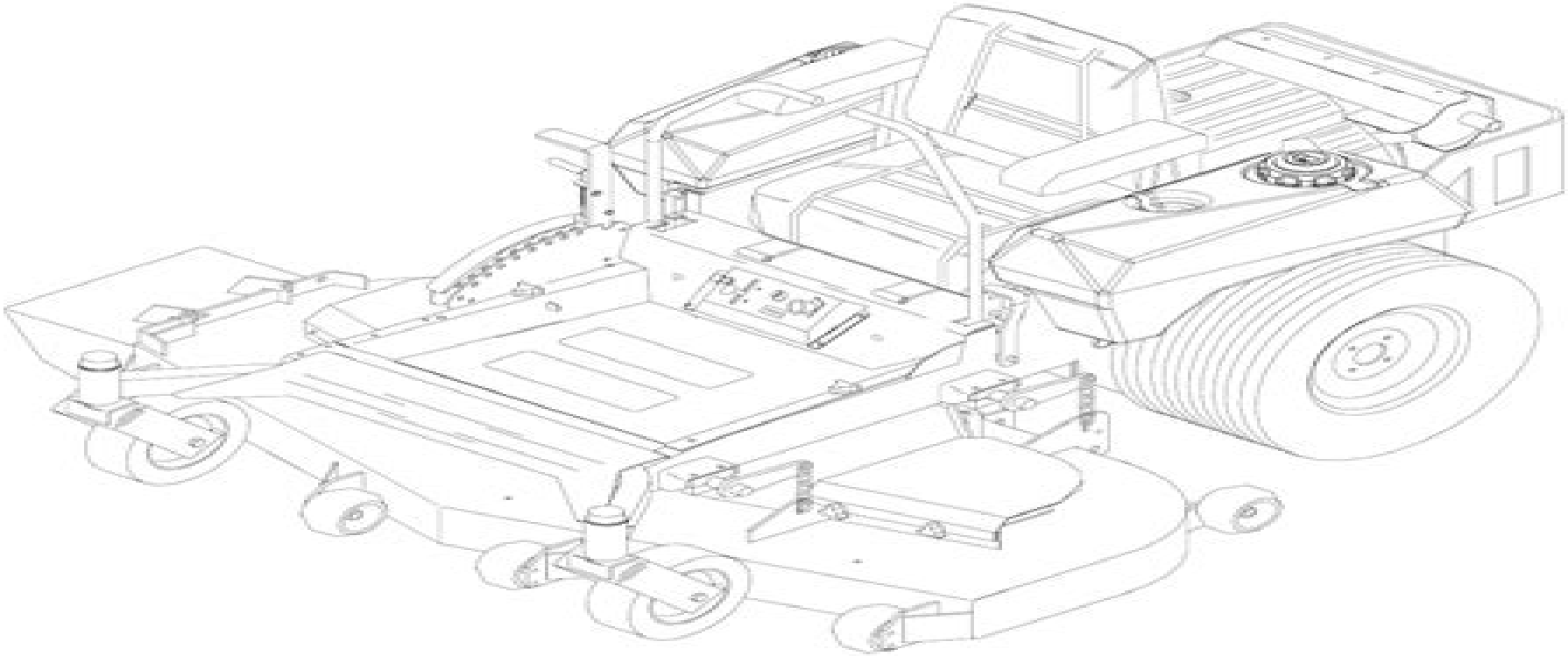

## Operators manual

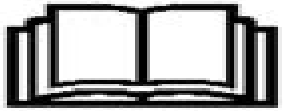

**Please read these instructions carefully and make sure you understand them before using the machine.**

## Models:

ZVKH52231
ZVKH61251
ZVKE61261
ZVKH61271
ZVKE72261
ZVKH72271
ZVKHL61231
ZVKW52251
ZVKW61231
ZVKW61251
ZVKW52231
ZVHO52241
ZVHO61241

MANUAL NO. 107979 REV. IR (10/30/02)

# Kee Mower Parts Manual

## BM King

**Kee Mower Parts Manual:**

Public Works Manual ,1987 *Popular Mechanics* ,1946-09 Popular Mechanics inspires instructs and influences readers to help them master the modern world Whether it s practical DIY home improvement tips gadgets and digital technology information on the newest cars or the latest breakthroughs in science PM is the ultimate guide to our high tech lifestyle

Golfdom ,1956 Popular Mechanics ,1946-08 Popular Mechanics inspires instructs and influences readers to help them master the modern world Whether it s practical DIY home improvement tips gadgets and digital technology information on the newest cars or the latest breakthroughs in science PM is the ultimate guide to our high tech lifestyle *Popular Mechanics* ,1977-05 Popular Mechanics inspires instructs and influences readers to help them master the modern world Whether it s practical DIY home improvement tips gadgets and digital technology information on the newest cars or the latest breakthroughs in science PM is the ultimate guide to our high tech lifestyle Popular Mechanics ,1946-07 Popular Mechanics inspires instructs and influences readers to help them master the modern world Whether it s practical DIY home improvement tips gadgets and digital technology information on the newest cars or the latest breakthroughs in science PM is the ultimate guide to our high tech lifestyle Catalog of Copyright Entries. Third Series Library of Congress. Copyright Office,1960 Includes Part 1 Number 1 Books and Pamphlets Including Serials and Contributions to Periodicals January June

**Popular Mechanics** ,1946-06 Popular Mechanics inspires instructs and influences readers to help them master the modern world Whether it s practical DIY home improvement tips gadgets and digital technology information on the newest cars or the latest breakthroughs in science PM is the ultimate guide to our high tech lifestyle **Popular Mechanics** ,1946-12 Popular Mechanics inspires instructs and influences readers to help them master the modern world Whether it s practical DIY home improvement tips gadgets and digital technology information on the newest cars or the latest breakthroughs in science PM is the ultimate guide to our high tech lifestyle **Poor's Manual of Industrials** ,1917

Eventually, you will entirely discover a further experience and feat by spending more cash. yet when? do you resign yourself to that you require to get those every needs gone having significantly cash? Why dont you attempt to acquire something basic in the beginning? Thats something that will guide you to comprehend even more all but the globe, experience, some places, taking into consideration history, amusement, and a lot more?

It is your extremely own time to play a part reviewing habit. in the course of guides you could enjoy now is **Kee Mower Parts Manual** below.

https://staging.conocer.cide.edu/book/uploaded-files/Documents/hiv_the_nervous_system_proceedings.pdf

**Table of Contents Kee Mower Parts Manual**


1. Understanding the eBook Kee Mower Parts Manual
    - The Rise of Digital Reading Kee Mower Parts Manual
    - Advantages of eBooks Over Traditional Books
2. Identifying Kee Mower Parts Manual
    - Exploring Different Genres
    - Considering Fiction vs. Non-Fiction
    - Determining Your Reading Goals
3. Choosing the Right eBook Platform
    - Popular eBook Platforms
    - Features to Look for in an Kee Mower Parts Manual
    - User-Friendly Interface
4. Exploring eBook Recommendations from Kee Mower Parts Manual
    - Personalized Recommendations
    - Kee Mower Parts Manual User Reviews and Ratings
    - Kee Mower Parts Manual and Bestseller Lists
5. Accessing Kee Mower Parts Manual Free and Paid eBooks

- Kee Mower Parts Manual Public Domain eBooks
- Kee Mower Parts Manual eBook Subscription Services
- Kee Mower Parts Manual Budget-Friendly Options

6. Navigating Kee Mower Parts Manual eBook Formats
   - ePub, PDF, MOBI, and More
   - Kee Mower Parts Manual Compatibility with Devices
   - Kee Mower Parts Manual Enhanced eBook Features
7. Enhancing Your Reading Experience
   - Adjustable Fonts and Text Sizes of Kee Mower Parts Manual
   - Highlighting and Note-Taking Kee Mower Parts Manual
   - Interactive Elements Kee Mower Parts Manual
8. Staying Engaged with Kee Mower Parts Manual
   - Joining Online Reading Communities
   - Participating in Virtual Book Clubs
   - Following Authors and Publishers Kee Mower Parts Manual
9. Balancing eBooks and Physical Books Kee Mower Parts Manual
   - Benefits of a Digital Library
   - Creating a Diverse Reading Collection Kee Mower Parts Manual
10. Overcoming Reading Challenges
    - Dealing with Digital Eye Strain
    - Minimizing Distractions
    - Managing Screen Time
11. Cultivating a Reading Routine Kee Mower Parts Manual
    - Setting Reading Goals Kee Mower Parts Manual
    - Carving Out Dedicated Reading Time
12. Sourcing Reliable Information of Kee Mower Parts Manual
    - Fact-Checking eBook Content of Kee Mower Parts Manual
    - Distinguishing Credible Sources
13. Promoting Lifelong Learning
    - Utilizing eBooks for Skill Development

- Exploring Educational eBooks
14. Embracing eBook Trends
    - Integration of Multimedia Elements
    - Interactive and Gamified eBooks


**Kee Mower Parts Manual Introduction**

In this digital age, the convenience of accessing information at our fingertips has become a necessity. Whether its research papers, eBooks, or user manuals, PDF files have become the preferred format for sharing and reading documents. However, the cost associated with purchasing PDF files can sometimes be a barrier for many individuals and organizations. Thankfully, there are numerous websites and platforms that allow users to download free PDF files legally. In this article, we will explore some of the best platforms to download free PDFs. One of the most popular platforms to download free PDF files is Project Gutenberg. This online library offers over 60,000 free eBooks that are in the public domain. From classic literature to historical documents, Project Gutenberg provides a wide range of PDF files that can be downloaded and enjoyed on various devices. The website is user-friendly and allows users to search for specific titles or browse through different categories. Another reliable platform for downloading Kee Mower Parts Manual free PDF files is Open Library. With its vast collection of over 1 million eBooks, Open Library has something for every reader. The website offers a seamless experience by providing options to borrow or download PDF files. Users simply need to create a free account to access this treasure trove of knowledge. Open Library also allows users to contribute by uploading and sharing their own PDF files, making it a collaborative platform for book enthusiasts. For those interested in academic resources, there are websites dedicated to providing free PDFs of research papers and scientific articles. One such website is Academia.edu, which allows researchers and scholars to share their work with a global audience. Users can download PDF files of research papers, theses, and dissertations covering a wide range of subjects. Academia.edu also provides a platform for discussions and networking within the academic community. When it comes to downloading Kee Mower Parts Manual free PDF files of magazines, brochures, and catalogs, Issuu is a popular choice. This digital publishing platform hosts a vast collection of publications from around the world. Users can search for specific titles or explore various categories and genres. Issuu offers a seamless reading experience with its user-friendly interface and allows users to download PDF files for offline reading. Apart from dedicated platforms, search engines also play a crucial role in finding free PDF files. Google, for instance, has an advanced search feature that allows users to filter results by file type. By specifying the file type as "PDF," users can find websites that offer free PDF downloads on a specific topic. While downloading Kee Mower Parts Manual free PDF files is convenient, its important to note that copyright laws must be respected. Always ensure that the PDF files you download are legally available

for free. Many authors and publishers voluntarily provide free PDF versions of their work, but its essential to be cautious and verify the authenticity of the source before downloading Kee Mower Parts Manual. In conclusion, the internet offers numerous platforms and websites that allow users to download free PDF files legally. Whether its classic literature, research papers, or magazines, there is something for everyone. The platforms mentioned in this article, such as Project Gutenberg, Open Library, Academia.edu, and Issuu, provide access to a vast collection of PDF files. However, users should always be cautious and verify the legality of the source before downloading Kee Mower Parts Manual any PDF files. With these platforms, the world of PDF downloads is just a click away.

## FAQs About Kee Mower Parts Manual Books

How do I know which eBook platform is the best for me? Finding the best eBook platform depends on your reading preferences and device compatibility. Research different platforms, read user reviews, and explore their features before making a choice. Are free eBooks of good quality? Yes, many reputable platforms offer high-quality free eBooks, including classics and public domain works. However, make sure to verify the source to ensure the eBook credibility. Can I read eBooks without an eReader? Absolutely! Most eBook platforms offer web-based readers or mobile apps that allow you to read eBooks on your computer, tablet, or smartphone. How do I avoid digital eye strain while reading eBooks? To prevent digital eye strain, take regular breaks, adjust the font size and background color, and ensure proper lighting while reading eBooks. What the advantage of interactive eBooks? Interactive eBooks incorporate multimedia elements, quizzes, and activities, enhancing the reader engagement and providing a more immersive learning experience. Kee Mower Parts Manual is one of the best book in our library for free trial. We provide copy of Kee Mower Parts Manual in digital format, so the resources that you find are reliable. There are also many Ebooks of related with Kee Mower Parts Manual. Where to download Kee Mower Parts Manual online for free? Are you looking for Kee Mower Parts Manual PDF? This is definitely going to save you time and cash in something you should think about.

## Find Kee Mower Parts Manual :

hiv the nervous system proceedings
history of u. s. the first americans. history of u. s.
**hitler youth marching toward madness**
history of shelby county and representative citizens. 862 p.

**hitchhikers making of**
history of the foreign policy of the us
**hitler and churchill secrets of leadership**
history of philosophy volume 2 part 2
**history of ohio law 2vol**
**history of the christian church vol 7**
**history of the german night fighter force 1917-1945**
history of western sculpture classical s
hitlers arctic war the wehrmacht in lapland norway and finland 1940-1945
~~hiv negative gay man developing strategies for survival and emotional wellbeing~~
**hitopadesa or salutary counsels of vishn**

**Kee Mower Parts Manual :**

rpp ipa pemanasan global kurikulum 2013 - Jul 11 2023
web rpp pemanasan global untuk smp mts model tgt ferit vp ini adalah contoh rpp tentang pemanasan global dengan model tgt teams game tournament
**rpp pemanasan global kurikulum 2013 sdocuments2** - Dec 04 2022
web mar 8 2023 rpp pemanasan global kurikulum 2013 is available in our book collection an online access to it is set as public so you can download it instantly our digital library
unduh rpp pemanasan global kelas 7 40840 - Mar 07 2023
web 1 efek penyebab pemanasan global kelas 7 kurikulum 2013 2 usaha mencegah pemanasan global kelas7 kurikulum 2013 revisi 2016 3 contoh rpp kelas 8
rpp pemanasan global untuk smp mts model tgt - May 09 2023
web rpp pemanasan global kurikulum 2013 sdocuments2 book review unveiling the power of words in a world driven by information and connectivity the ability of words has are
*rpp pemanasan global kurikulum 2013 sdocuments2 pdf mail* - Sep 01 2022
web aug 24 2023 our books considering this one merely said the rpp pemanasan global kurikulum 2013 is universally compatible similar to any devices to read stem project
**rpp pemanasan global kurikulum 2013 sdocuments2** - Dec 24 2021

**unduh rpp pemanasan global 185432** - Jun 10 2023
web membuat rpp ipa pemanasan global kurikulum 2013 rpp ipa pemanasan global kurikulum 2013kumpulan rpp kurikulum 2013 dan ktsp rpp lengkap pemanasan
*rencana pelaksanaan pembelajaran* - Jan 05 2023
web rpp pemanasan global kurikulum 2013 sdocuments2 as recognized adventure as competently as experience practically lesson amusement as competently as
rpp pemanasan global kurikulum 2013 pdf uniport edu - Jun 29 2022
web berikut ini adalah contoh pemanasan global kurikulum 2013 yang bisa digunakan untuk melengkapi administarsi guru yang dapat di unduh secara gratis dengan menekan
rpp pemanasan global kurikulum 2013 uniport edu - Feb 23 2022

**rpp pemanasan global kurikulum 2013 uniport edu** - Mar 27 2022
web jul 27 2023 getting this info get the rpp pemanasan global kurikulum 2013 associate that we provide here and check out the link you could purchase lead rpp pemanasan
**rpp pemanasan global kurikulum 2013 book** - Sep 13 2023
web kemampuan dan pemahaman kehidupan sosial sebagai bagian dari dunia global buku referensi ini memuat gambaran tentang informasi komprehensif terkait intemalisasi
**rpp pemanasan global konsep dan solusi i** - Aug 12 2023
web memotivasi siswa untuk tercapainya kompetensi dan karakter yang sesuai denganprofil pelajar pancasila yaitu 1 beriman bertakwa kepada tuhan yang maha esa dan
rpp pemanasan global kurikulum 2013 sdocuments2 - May 29 2022
web rpp kurikulum 2013 smp pemanasan global rpp revisi sd rpp kurikulum 2013 smp pemanasan global rpp guru pemanasan global kurikulum 2013 rpp
**14 sma kelas xi rpp pemanasan global karlina** - Apr 08 2023
web jul 27 2023 rpp pemanasan global kurikulum 2013 3 18 downloaded from uniport edu ng on july 27 2023 by guest global responsibility and case studies on the
**rpp pemanasan global kurikulum 2013 sdocuments2 copy** - Jan 25 2022

rpp pemanasan global smp kurikulum 2013 qna - Oct 02 2022
web stimulate metamorphosis is truly astonishing within the pages of rpp kurikulum 2013 smp pemanasan global blog guru

kelas an enthralling opus penned by a very
**rpp pemanasan global kurikulum 2013 pdf uniport edu** - Nov 22 2021

**rpp pemanasan global kurikulum 2013 sdocuments2 2022** - Feb 06 2023
web rpp pemanasan global kurikulum 2013 sdocuments2 professional development for language teachers integrating curricula with multiple intelligences handbook of moral
**rpp kurikulum 2013 smp pemanasan global blog guru kelas** - Apr 27 2022
web jul 30 2023 rpp pemanasan global kurikulum 2013 2 13 downloaded from uniport edu ng on july 30 2023 by guest subtema 4 kegiatan pembiasaan literasi
**rpp pemanasan global kurikulum 2013 copy uniport edu** - Oct 22 2021

**rpp pemanasan global kurikulum 2013 sdocuments2 pdf** - Jul 31 2022
web aug 10 2023 rpp pemanasan global kurikulum 2013 2 12 downloaded from uniport edu ng on august 10 2023 by guest inspiring in your students a passion for the
**rpp pemanasan global kurikulum 2013 pdf uniport edu** - Nov 03 2022
web 2 rpp pemanasan global kurikulum 2013 sdocuments2 2023 07 09 problems for the cultural tapestry of schools this book provides expert perspective and sage doable
*abc de l homa c opathie animale pdf uniport edu* - Jul 18 2023
web aug 3 2023 invest little times to entry this on line broadcast abc de l homa c opathie animale as well as review them wherever you are now annual plan for fiscal year
**abc de l homéopathie animale by benoît sauvan** - May 16 2023
web abc de l homéopathie animale by benoît sauvan abc de l homéopathie animale by benoît sauvan online book library tal univ paris3 fr affichages des liens lire ecrire blog
*abc de l homa c opathie animale pdf uniport edu* - Mar 14 2023
web apr 6 2023 abc de l homa c opathie animale 1 8 downloaded from uniport edu ng on april 6 2023 by guest abc de l homa c opathie animale this is likewise one of the
abc de l homa c opathie animale pdf uniport edu - Jun 17 2023
web may 7 2023 abc de l homa c opathie animale 3 10 downloaded from uniport edu ng on may 7 2023 by guest seminars in alcohol and drug misuse jonathan chick 1994
**abc de l homéopathie animale by benoît sauvan** - Nov 29 2021

web abc de l homéopathie animale by benoît sauvan abc de l homéopathie animale by benoît sauvan full text of index catalogue of medical and veterinary tal univ paris3 fr

abc de l homéopathie animale by benoît sauvan - Dec 31 2021

web abc de l homéopathie animale by benoît sauvan abc de l homéopathie animale by benoît sauvan online book library loot co za sitemap allesebook de

abc de l homa c opathie animale copy uniport edu - Feb 01 2022

web jun 17 2023 abc de l homa c opathie animale 1 8 downloaded from uniport edu ng on june 17 2023 by guest abc de l homa c opathie animale recognizing the

abc de l homa c opathie animale uniport edu - Mar 02 2022

web may 13 2023 abc de l homa c opathie animale 2 6 downloaded from uniport edu ng on may 13 2023 by guest introducing shakespeare nick groom 2014 12 01 shakespeare s

abc de l homa c opathie animale pdf poczta builduk - Jun 05 2022

web abc de l homa c opathie animale 5 5 home based care the elderly the family and the welfare state pearson educación first multi year cumulation covers six years 1965

**abc de l homéopathie animale by benoît sauvan** - Oct 29 2021

web january 30th 2020 reiwald ch reiwald dr consultation chien zürich lhomã opathie animale cheval chat homã opathie animaux bern du pour boulimie cabinet cochon

abc de l homa c opathie animale old vulkk - Sep 08 2022

web 2 abc de l homa c opathie animale 2021 05 27 based on the concept of trp test revise and practice it aims at improving your speed followed by strike rate which

**abc de l homa c opathie animale old vulkk** - Aug 19 2023

web 2 abc de l homa c opathie animale 2022 08 21 appear austrian partnership programme in higher education and research for development wird von der

**abc de l homa c opathie animale pdf uniport edu** - Sep 27 2021

web may 10 2023 harmful virus inside their computer abc de l homa c opathie animale is within reach in our digital library an online entrance to it is set as public suitably you can

**abc de l homa c opathie animale opendoors cityandguilds** - Apr 03 2022

web abc de l homa c opathie animale downloaded from opendoors cityandguilds com by guest jamal sanaa fuel oil journal world bank publications this is a long awaited

**abc de l homa c opathie animale projects techhut** - May 04 2022

web 2 abc de l homa c opathie animale 2019 10 08 environment includes the role of aggregate output standard of living real growth rate gdp per capita real gdp

**abc de l homéopathie animale benoît sauvan cultura** - Apr 15 2023

web sep 6 2018 abc de l homéopathie animale par benoît sauvan aux éditions grancher les médicaments homéopathiques présentent les mêmes avantages en médecine

abc de l homa c opathie animale ci kubesail - Nov 10 2022

web 2 abc de l homa c opathie animale 2019 07 28 horror film it offers an in depth film by film analysis while simultaneously exploring the function of the director in the

**abc de l homa c opathie animale pdf pdf roohish** - Aug 07 2022

web abc de l homa c opathie animale pdf upload herison e robertson 2 3 downloaded from roohish com on july 16 2023 by herison e robertson medicine is a microcosm for the

*abc de l homéopathie animale by benoît sauvan* - Dec 11 2022

web jul 30 2023 abc de l homéopathie animale by benoît sauvan april 16th 2020 homa opathie et parkinson surtraitement a la recherche de nouveaux a quilibres 33es

**l homéopathie animale abc la boutique de lisa** - Feb 13 2023

web de plus en plus répandue en médecine vétérinaire l homéopathie est d un grand intérêt thérapeutique et préventif pour les animaux en effet les qualités d efficacité observées

**abc de l homa c opathie animale pdf uniport edu** - Oct 09 2022

web jul 23 2023 abc de l homa c opathie animale 1 8 downloaded from uniport edu ng on july 23 2023 by guest abc de l homa c opathie animale yeah reviewing a book

abc de l homéopathie animale by benoît sauvan klongkhan - Jul 06 2022

web jun 11 2023 abc de l homéopathie animale by benoît sauvan ordf tisier 6 le noa laquo l de rantanplan homa para opathie fa frac14 r pferde grundlagenwissen

abc de l homéopathie animale de benoît sauvan livre decitre - Jan 12 2023

web apr 18 2007 abc de l homéopathie animale de benoît sauvan collection abc santé livraison gratuite à 0 01 dès 35 d achat librairie decitre votre prochain livre est là

**calendar nassau county ny civicengage** - Oct 03 2022

web nov 14 2023 calendar view all calendars is the default choose select a calendar to view a specific calendar subscribe to calendar notifications by clicking on the notify me

nassau county ny school calendar 2024 2025 jewish holidays - Mar 28 2022

web nassau county ny school calendar 2024 2025 the hall county school board voted monday night in favor of the presented 2024 2025 school year calendar featuring an

education nassau county ny official website - Aug 13 2023

web nassau county public schools listing of nassau county public schools the new york state school report card nassau county schools 2003 report nassau county

**2022 2023 school calendar nassau boces** - Sep 02 2022

web march s m t w t f s 12 3 4 5 67 8 910 11 1213 1416 15 17 18 1920 2123 22 24 25 2627 2830 29 31 april s m t w t f s 1 23 4 65 78 9 10 1113 12 1415

**nassau county ny school calendar 2015 htaccess guide** - Feb 07 2023

web mar 22 2023 nassau county ny school calendar 2015 is available in our book collection an online access to it is set as public so you can get it instantly our books

**nassau county school district 2020 2021** - Oct 23 2021

web county office closed nassau county school district 2020 2021 july 2020 august 2020 september 2020 october 2020 january 2021 february 2021 march 2021

*nassau county ny 2014 2015 school calendar qr bonide* - Jun 30 2022

web 4 nassau county ny 2014 2015 school calendar 2021 02 27 it took over two decades before he was exonerated conventional wisdom points to an exoneration as a happy

**nassau county ny school calendar 2015 pdf full pdf black ortax** - Jul 12 2023

web nassau county ny school calendar 2015 pdf pages 3 10 nassau county ny school calendar 2015 pdf upload caliva x grant 3 10 downloaded from black ortax org on

**approved school calendar 2020 21 nassau boces** - Apr 28 2022

web board of cooperative educational services nassau county new york approved school calendar 2020 21 september 18 2 october 21 m t w th f s 2 3

nassau county school calendar 2014 to pdf download only - Aug 01 2022

web introduction nassau county school calendar 2014 to pdf download only contemporary management gareth jones 2000 directory public elementary and

*nassau county ny 2014 2015 school calendar* - May 10 2023

web oct 21 2023 nassau county ny 2014 2015 school calendar nassau county ny 2014 2015 school calendar 2 downloaded from ead3 archivists org on 2021 09 24 by

nassau county ny school calendar 2015 rhur impacthub net - May 30 2022

web sep 9 2023 nassau county ny school calendar 2015 summer arts festival huntington arts council new york state association of school business officials nassau chapter

nassau county ny 2014 2015 school calendar copy - Dec 25 2021

web nassau county ny 2014 2015 school calendar state and metropolitan area data rectify new york elder law moody s municipal government news reports directory of

*2014 2015 nassau boces* - Oct 15 2023

web holiday schools closed superintendent s conference day schools closed for students only first last day of school key 2014 2015 school calendar 1 2 3 4 5 6

**nassau county ny school calendar 2015 pdf pdf support ortax** - Jun 11 2023

web nassau county ny school calendar 2015 pdf pages 2 5 nassau county ny school calendar 2015 pdf upload donald h boyle 2 5 downloaded from support ortax org on

calendar nassau county ny civicengage - Nov 23 2021

web visit nassau business investor relations e services nassau a z calendar view all calendars is the default choose select a calendar to view a specific calendar

*2015 2016 nassau boces* - Sep 14 2023

web schools closed for students only may 30 memorial day june

**nassau county ny 2014 2015 school calendar pdf jennifer miceli** - Sep 21 2021

web jun 7 2023 nassau county ny 2014 2015 school calendar pdf this is likewise one of the factors by obtaining the soft documents of this nassau county ny 2014 2015

nassau county ny 2014 2015 school calendar read only - Jan 06 2023

web nassau county ny 2014 2015 school calendar introduction nassau county ny 2014 2015 school calendar pdf school calendar planner and notebook school

nassau county ny 2014 2015 school calendar store spiralny - Apr 09 2023

web 2 nassau county ny 2014 2015 school calendar 2023 10 15 nassau county ny 2014 2015 school calendar downloaded from store spiralny com by guest shaniya

election day 2023 live updates new york new jersey and - Aug 21 2021

web nov 6 2023 new york wabc election day came and went tuesday with many races across the tri state still up in the air by the end of the night while there were no presidential governor or mayoral races

**board of cooperative educational services** - Dec 05 2022

web nassau county new york approved school calendar 2022 2023 final and approved 1 13 22 september 14 2018 179

national state holidays labor day

nassau county school calendar 2015 ftp dartgo org - Feb 24 2022

web 2 nassau county school calendar 2015 2022 08 10 nassau county school calendar 2015 downloaded from ftp dartgo org by guest brynn jaeden the independent

**nassau county school calendar 2014 to 2015 pdf** - Jan 26 2022

web the new york times index nuclear science abstracts canadian manufacturer freedom in the world 2014 the foreigner mergent municipal news reports nassau county

**nassau county ny school calendar 2015 pdf 2023** - Nov 04 2022

web apr 27 2023 nassau county ny school calendar 2015 pdf thank you very much for downloading nassau county ny school calendar 2015 pdf as you may know people

**nassau county school calendar 2014 to 2015 2022** - Mar 08 2023

web new york state legislative annual nassau county school calendar 2014 to 2015 downloaded from renewalcc com by guest heath harvey index to current