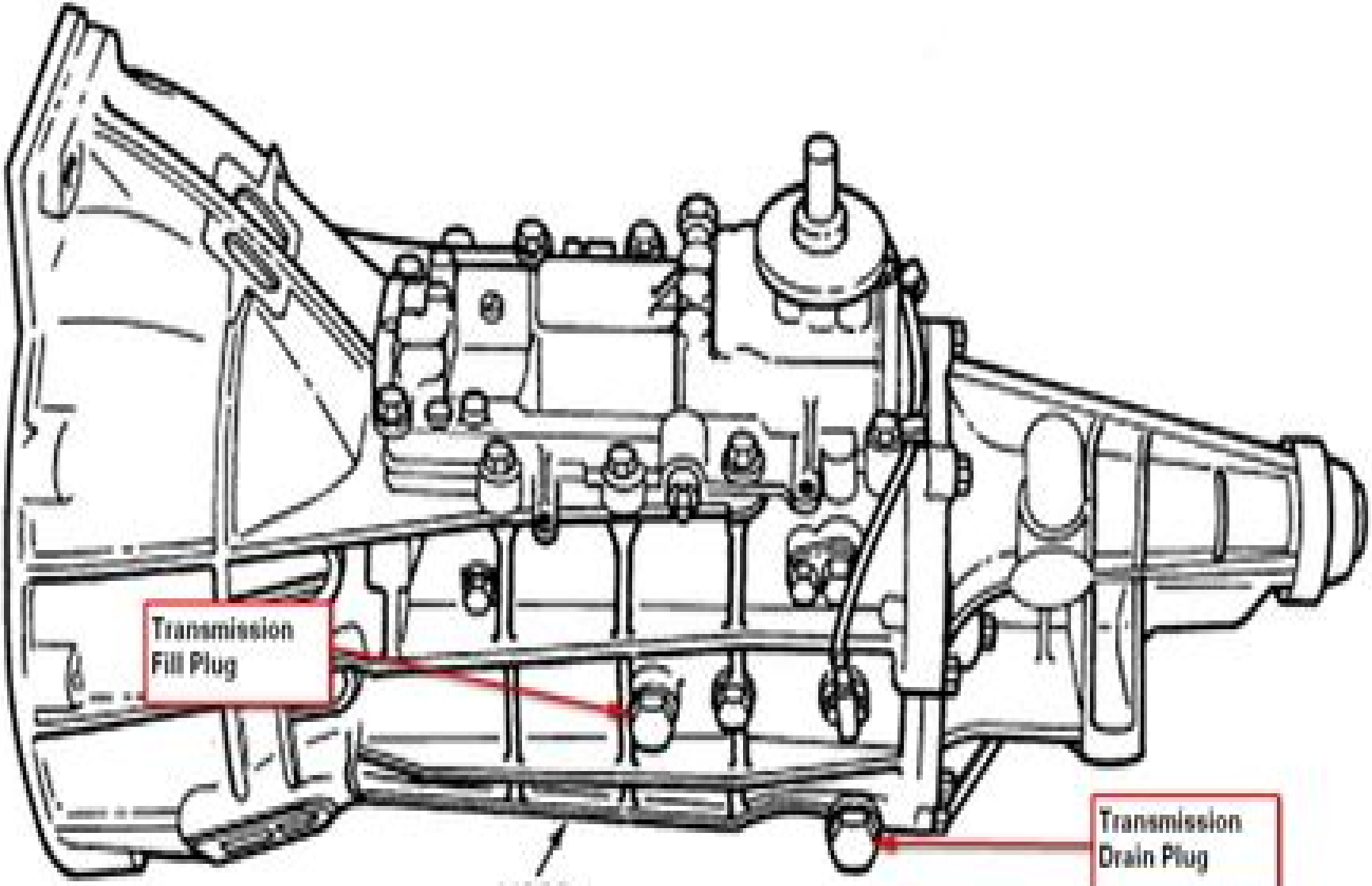


M50D
TRANSMISSION ASSEMBLY

# Ford Ranger Manual Transmission Problems

Katrin Zwirglmaier

**Ford Ranger Manual Transmission Problems:**

Embark on a transformative journey with Written by is captivating work, Discover the Magic in **Ford Ranger Manual Transmission Problems** . This enlightening ebook, available for download in a convenient PDF format , invites you to explore a world of boundless knowledge. Unleash your intellectual curiosity and discover the power of words as you dive into this riveting creation. Download now and elevate your reading experience to new heights .

https://staging.conocer.cide.edu/files/browse/index.jsp/hyundai%20crawler%20excavator%20robex%20140lc%209%20complete%20manual.pdf

**Table of Contents Ford Ranger Manual Transmission Problems**


1. Understanding the eBook Ford Ranger Manual Transmission Problems
    - The Rise of Digital Reading Ford Ranger Manual Transmission Problems
    - Advantages of eBooks Over Traditional Books
2. Identifying Ford Ranger Manual Transmission Problems
    - Exploring Different Genres
    - Considering Fiction vs. Non-Fiction
    - Determining Your Reading Goals
3. Choosing the Right eBook Platform
    - Popular eBook Platforms
    - Features to Look for in an Ford Ranger Manual Transmission Problems
    - User-Friendly Interface
4. Exploring eBook Recommendations from Ford Ranger Manual Transmission Problems
    - Personalized Recommendations
    - Ford Ranger Manual Transmission Problems User Reviews and Ratings
    - Ford Ranger Manual Transmission Problems and Bestseller Lists
5. Accessing Ford Ranger Manual Transmission Problems Free and Paid eBooks
    - Ford Ranger Manual Transmission Problems Public Domain eBooks
    - Ford Ranger Manual Transmission Problems eBook Subscription Services

    - Ford Ranger Manual Transmission Problems Budget-Friendly Options
6. Navigating Ford Ranger Manual Transmission Problems eBook Formats
    - ePub, PDF, MOBI, and More
    - Ford Ranger Manual Transmission Problems Compatibility with Devices
    - Ford Ranger Manual Transmission Problems Enhanced eBook Features
7. Enhancing Your Reading Experience
    - Adjustable Fonts and Text Sizes of Ford Ranger Manual Transmission Problems
    - Highlighting and Note-Taking Ford Ranger Manual Transmission Problems
    - Interactive Elements Ford Ranger Manual Transmission Problems
8. Staying Engaged with Ford Ranger Manual Transmission Problems
    - Joining Online Reading Communities
    - Participating in Virtual Book Clubs
    - Following Authors and Publishers Ford Ranger Manual Transmission Problems
9. Balancing eBooks and Physical Books Ford Ranger Manual Transmission Problems
    - Benefits of a Digital Library
    - Creating a Diverse Reading Collection Ford Ranger Manual Transmission Problems
10. Overcoming Reading Challenges
    - Dealing with Digital Eye Strain
    - Minimizing Distractions
    - Managing Screen Time
11. Cultivating a Reading Routine Ford Ranger Manual Transmission Problems
    - Setting Reading Goals Ford Ranger Manual Transmission Problems
    - Carving Out Dedicated Reading Time
12. Sourcing Reliable Information of Ford Ranger Manual Transmission Problems
    - Fact-Checking eBook Content of Ford Ranger Manual Transmission Problems
    - Distinguishing Credible Sources
13. Promoting Lifelong Learning
    - Utilizing eBooks for Skill Development
    - Exploring Educational eBooks
14. Embracing eBook Trends

- Integration of Multimedia Elements
- Interactive and Gamified eBooks

## Ford Ranger Manual Transmission Problems Introduction

Ford Ranger Manual Transmission Problems Offers over 60,000 free eBooks, including many classics that are in the public domain. Open Library: Provides access to over 1 million free eBooks, including classic literature and contemporary works. Ford Ranger Manual Transmission Problems Offers a vast collection of books, some of which are available for free as PDF downloads, particularly older books in the public domain. Ford Ranger Manual Transmission Problems : This website hosts a vast collection of scientific articles, books, and textbooks. While it operates in a legal gray area due to copyright issues, its a popular resource for finding various publications. Internet Archive for Ford Ranger Manual Transmission Problems : Has an extensive collection of digital content, including books, articles, videos, and more. It has a massive library of free downloadable books. Free-eBooks Ford Ranger Manual Transmission Problems Offers a diverse range of free eBooks across various genres. Ford Ranger Manual Transmission Problems Focuses mainly on educational books, textbooks, and business books. It offers free PDF downloads for educational purposes. Ford Ranger Manual Transmission Problems Provides a large selection of free eBooks in different genres, which are available for download in various formats, including PDF. Finding specific Ford Ranger Manual Transmission Problems, especially related to Ford Ranger Manual Transmission Problems, might be challenging as theyre often artistic creations rather than practical blueprints. However, you can explore the following steps to search for or create your own Online Searches: Look for websites, forums, or blogs dedicated to Ford Ranger Manual Transmission Problems, Sometimes enthusiasts share their designs or concepts in PDF format. Books and Magazines Some Ford Ranger Manual Transmission Problems books or magazines might include. Look for these in online stores or libraries. Remember that while Ford Ranger Manual Transmission Problems, sharing copyrighted material without permission is not legal. Always ensure youre either creating your own or obtaining them from legitimate sources that allow sharing and downloading. Library Check if your local library offers eBook lending services. Many libraries have digital catalogs where you can borrow Ford Ranger Manual Transmission Problems eBooks for free, including popular titles.Online Retailers: Websites like Amazon, Google Books, or Apple Books often sell eBooks. Sometimes, authors or publishers offer promotions or free periods for certain books.Authors Website Occasionally, authors provide excerpts or short stories for free on their websites. While this might not be the Ford Ranger Manual Transmission Problems full book , it can give you a taste of the authors writing style.Subscription Services Platforms like Kindle Unlimited or Scribd offer subscription-based access to a wide range of Ford Ranger Manual Transmission Problems eBooks, including some popular titles.

## FAQs About Ford Ranger Manual Transmission Problems Books

How do I know which eBook platform is the best for me? Finding the best eBook platform depends on your reading preferences and device compatibility. Research different platforms, read user reviews, and explore their features before making a choice. Are free eBooks of good quality? Yes, many reputable platforms offer high-quality free eBooks, including classics and public domain works. However, make sure to verify the source to ensure the eBook credibility. Can I read eBooks without an eReader? Absolutely! Most eBook platforms offer web-based readers or mobile apps that allow you to read eBooks on your computer, tablet, or smartphone. How do I avoid digital eye strain while reading eBooks? To prevent digital eye strain, take regular breaks, adjust the font size and background color, and ensure proper lighting while reading eBooks. What the advantage of interactive eBooks? Interactive eBooks incorporate multimedia elements, quizzes, and activities, enhancing the reader engagement and providing a more immersive learning experience. Ford Ranger Manual Transmission Problems is one of the best book in our library for free trial. We provide copy of Ford Ranger Manual Transmission Problems in digital format, so the resources that you find are reliable. There are also many Ebooks of related with Ford Ranger Manual Transmission Problems. Where to download Ford Ranger Manual Transmission Problems online for free? Are you looking for Ford Ranger Manual Transmission Problems PDF? This is definitely going to save you time and cash in something you should think about.

## Find Ford Ranger Manual Transmission Problems :

**hyundai crawler excavator robex 140lc 9 complete manual**
hyundai crawler mini excavator r75 7 service repair manual
*hyundai accent 2003 crdi repair manual*
**hyundai elantra full service repair manual 1996 2001**
~~hyundai b90d manual~~
**hyundai matrix 2001 2013 workshop service repair manual**
**hyundai excel 94 manual**
hyundai h1 etm electrical troubleshooting wiring diagram
*hyundai accent guide*
*hyundai santa fe 2011 factory service repair manual*
**hyundai g4gb timing mark diagrams**
~~hyundai robex r35 7 crawler mini excavator operating manual~~

**hyundai hydvb1 user guide**
*hyundai hl757tm 7 wheel loader workshop service repair manual*
hyundai dohc 16v engine diagram

**Ford Ranger Manual Transmission Problems :**

**bab ii tinjauan pustaka 2 1 klasifikasi dan botani kangkung** - May 12 2023
web klasifikasi botani tanaman kangkung berdasarkan kelas taksonominya adalah sebagai berikut eko widiyanto 1991 kelas dicotyledonae famili convolvulaceae genus ipomoea spesies ipomoea reptans poir di indonesia terdapat kangkung dengan berbagai aksesi seperti aksesi 511 asal bekasi 504 asal bengkulu 512 asal cikampek dan
**kangkung wikipedia bahasa indonesia ensiklopedia bebas** - Jul 14 2023
web kangkung ipomoea aquatica adalah tumbuhan yang termasuk jenis sayur sayuran dan ditanam sebagai makanan kangkung banyak dijual di pasar pasar kangkung banyak terdapat di kawasan asia tempat asalnya tidak diketahui dan merupakan tumbuhan yang dapat dijumpai hampir di mana mana terutama di kawasan berair
**klasifikasi dan morfologi tanaman kangkung ilmu pertanian** - Aug 15 2023
web feb 7 2022 baca juga syarat tumbuh tanaman kangkung klasifikasi tanaman kangkung tanaman kangkung merupakan tanaman yang memiliki nama latin ipomea aquatic forsk berikut akan dijabarkan lebih detail mengenai klasifikasi dari tanaman kangkung itu sendiri kingdom kerajaan plantae sub kingdom viridiplantae infra
**2 tinjauan pustaka 2 1 biologi kangkung darat ipomoea** - Dec 07 2022
web kelas magnoliapsida berkeping dua dikotil sub kelas asteridae ordo solanales familia convolvulaceae suku kankung kangkungan genus ipomea spesies ipomea reptans poir kangkung merupakan tanaman yang dapat tumbuh lebih dari satu tahun tanaman kangkung memiliki sistem perakaran tunggang dan cabang cabangnya
*simak klasifikasi dan morfologi tanaman kangkung yang benar* - Sep 04 2022
web klasifikasi tanaman kangkung tanaman kangkung memiliki nama latin ipomoea aquatica forsk yaitu tanaman spesies sayur sayuran yang bisa dikonsumsi karena itulah tanaman kangkung dijual di pasar semata untuk memenuhi kebutuhan gizi manusia bahkan sayur hijau ini telah menjadi pencaharian masyarakat pedesaan
*budidaya kangkung cyber extension* - Jun 01 2022
web tanaman kangkung darat diklasifikasikan sebagai berikut kingdom plantea tumbuhan subkingdom tracheobionta berpembuluh superdivisio spermatophyta menghasilkan biji divisio magnoliophyta berbunga kelas magnoliapsida berkeping dua dikotil sub kelas asteridae ordo solanales
ii tinjauan pustaka 2 1 kangkung air ipomoea aquatica - Jan 28 2022

web klasifikasi kangkung air ipomoea aquatica kingdom divisi spermatophyta subdivisi kelas dicotyledoneae ordo tubiflorae famili convolvulaceae genus ipomoea spesies ipomoeaaquatica gambar 1 kangkung air ipomoea aquatica forsk sumber mesprout 2018 famili convovulaceae merupakan herba atau semak berkayu kebanyakan

2 1 tinjauan tentang tanaman kangkung darat bab 2 - Oct 05 2022

web 2 1 2 klasifikasi tanaman kangkung darat ipomoea reptans poir menurut helminawati 2011 klasifikasi ipomoea reptans poir adalah sebagai berikut kingdom sub kingdom super divisi division class sub class plantae tracheobionta spermatophyta magnoliophyta magnoliopsida asteridae order family

**budidaya kangkung cyber extension** - Mar 30 2022

web jenis tanaman kangkung termasuk suku convolvula ceae keluarga kangkung kangkungan kedudukan tanaman kangkung dalam sistem atika tumbuh tumbuhan diklasifikasikan ke dalam a divisio spermatophyta b sub divisio angiospermae c kelas dicotyledonae d famili convolvulaceae e genus ipomoea f species ipomoea

*klasifikasi dan morfologi tanaman kangkung beserta* - Jan 08 2023

web jun 10 2021 tanaman kangkung memiliki nama ilmiah ipomea aquatic berikut ini klasifikasi tanaman kangkung kingdom plantae atau tumbuhan subkingdom tracheobionta atau berpembuluh superdivisi spermatophyte atau menghasilkan biji divisi magnoliophyta atau berbunga kelas magnoliopsida atau berkeping dua subkelas

**klasifikasi dan morfologi tanaman kangkung lengkap** - Apr 30 2022

web klasifikasi dan morfologi tanaman kangkung lengkap hai sobat vertikal siapa yang tidak kenal dengan tanaman kangkung yap tanaman ini sudah tidak asing lagi bagi kita dan sangat muda dijumpai baik di darat maupun di perairan

**klasifikasi dan morfologi tanaman kangkung ilmu pengetahuan** - Apr 11 2023

web nov 10 2018 untuk lebih jelasnya terdapat klasifikasi berdasarkan taksonomi tanaman kangkung yaitu kingdom plantae sub kingdom tracheobionta infra kingdom streptophyta super divisi spermatophyta divisi magnoliophyta kelas magnoliapsida sub kelas asteridae ordo solanales famili convolvulaceae genus ipomea

**bab ii tinjauan pustaka 2 1 orfologi dan botani tanaman kangkung** - Dec 27 2021

web kelas ordo family genus species jenis kangkung yang umumnya dibudidayakan terdiri dari dua macam yaitu kangkung air dan kangkung darat bagian dari tanaman kangkung yang paling banyak dimanfaatkan ialah batang muda dan daun daunnya daun dan batang kangkung merupakan

2 1 1 klasifikasi tanaman kangkung air ipomoea aquatica - Nov 06 2022

web 2 1 tinjauan umum kangkung air ipomoea aquatica forsk 2 1 1 klasifikasi tanaman kangkung air ipomoea aquatica forsk jika dirunut dari tempat asalnya ternyata kangkung bukanlah sayuran asli indonesia pertama kali ditemukan kangkung berada di asia afrika amerika selatan amerika tengah dan oceania di kawasan asia

**bab i pendahuluan kangkung swanp atau dkk 1993** - Jul 02 2022
web 2 1 botani tanaman kangkung 2 1 1 sistematika tanaman kangkung ipomoea reptans poir sebagai berikut sunarjono 2003 kingdom plantae divisio spermatophyta sub divisio angiospermae kelas dicotyledonae ordo solanales famili convolvulaceae genus ipomoea spesies ipomoea reptans poir 2 1 2 morfologi tanaman kangkung
*bab ii tinjauan pustaka 2 1 tinjauan umum kangkung* - Aug 03 2022
web kangkimg termasuk ke dalam famili convolvulaceae atau kangkung kangkimgan dengan ciri ciri batangnya kecil bulat panjang bagian dalamnya berlubang dan bergetah selain itu kangkung merupakan siunber vitamin a vitamin c dan mineral seperti zat besi kalsium kalium dan fosfor nazaruddin 2003
bab ii tinjauan pustaka universitas diponegoro - Feb 09 2023
web tinjauan pustaka 2 1 kangkung kangkung ipomoea reptans merupakan tanaman tahunan yang hidup di daerah tropis maupun subtropis tanaman ini termasuk dalam family convolvulaceae atau kangkung kangkungan dengan batang bergetah dan berlubang didalamnya spesies dari tanaman sejenis ini adalah ipomeae batatas atau ubi jalar
*kangkung klasifikasi nama ilmiah tanaman ciri ciri jenis* - Jun 13 2023
web sep 15 2023 klasifikasi kangkung tanaman yang memiliki nama ilmiah ipomea aquatic forsk ini pasti sudah familiar di telinga anda tapi tahukah anda apa klasifikasi tanaman kangkung berikut klasifikasinya kingdom plantae sub kingdom viridiplantae infra kingdom streptophyta
*klasifikasi dan morfologi kangkung ipomoea reptans poir* - Feb 26 2022
web tanaman kangkung ipomoea reptans poir diklasifikasikan sebagai berikut kingdom plantae divisi spermatophyta sub divisi angiospermae kelas dicotyledonae ordo solanales famili convolvulaceae genus ipomoea spesies ipomoea reptans poir morfologi tanaman kangkung darat
**tanaman kangkung klasifikasi ciri morfologi jenis dan cara** - Mar 10 2023
web apr 13 2023 berikut klasifikasinya kingdom plantae sub kingdom viridiplantae infra kingdom streptophyta luar biasa divisi embryophyta divisi tracheophyta sub divisi spermatophytina kelas magnoliopsida ordo solanales family convolvulaceae genus ipomea l spesies ipomea aquatic forsk
**charles j joachain wikipedia** - Mar 17 2023
web professor joachain has published five books 1 quantum collision theory north holland amsterdam 1975 2d edition 1979 3d edition 1983 2 physics of atoms and molecules with b h bransden longman london 1983 2d edition prentice hall pearson 2003
**physics of atoms and molecules universiteitsbibliotheek gent** - Jan 15 2023
web physics of atoms and molecules brian harold bransden charles jean joachain published in 2003 in harlow by prentice hall

electrons photons and atoms the elements of quantum mechanics one electron atoms interaction of one electron atoms with electromagnetic radiation one electron atoms fine structure a toon meer

pdf bransden b h h joachain c j academia edu - May 19 2023

web bransden b h h joachain c j the physics of atoms and molecules 1983 close log in log in with facebook log in with google or email password remember me on this computer or reset password enter the email address you signed up with and we ll email you a reset link

b h bransden charles jean joachain google books - Apr 18 2023

web b h bransden charles jean joachain prentice hall 2000 quantum theory 803 pages the study of quantum mechanics and its applications occupies a central position in the physical sciences

**physics of atoms and molecules ghent university library** - Dec 14 2022

web physics of atoms and molecules b h bransden and c j joachain isbn 0582444012 author bransden brian harold viaf

**physics of atoms and molecules second edition request pdf** - Oct 12 2022

web jan 1 2003 its analysis is basic not only to gain a full insight into the intimate structure of matter but also for other numerous phenomena like light matter interaction bransden and joachain 2003 the

**download physics of atoms and molecules bransden and joachain** - Aug 10 2022

web download physics of atoms and molecules bransden and joachain pdf type pdf date november 2019 size 25 2mb author paramita haldar this document was uploaded by user and they confirmed that they have the permission to share it

**pdf physics of atoms and molecules researchgate** - Jul 21 2023

web pdf on oct 23 2014 b h bransden and others published physics of atoms and molecules find read and cite all the research you need on researchgate

**physics of atoms and molecules bransedn and joachain** - Sep 23 2023

web jan 30 2017 physics of atoms and molecules bransedn and joachain by bransedn and joachain publication date 2017 01 30 usage public domain mark 1 0 topics atoms molecules

**quantum mechanics second edition request pdf** - May 07 2022

web jan 1 2000 the material for this chapter has been based on the course given at linköpings university with bransden and joachain 2000 as the course literature for more details consult the book

**1 introduction to quantum mechanics ntnu** - Jun 08 2022

web chapter 1 in bransden joachain gives a more comprehensive review and should be consulted for more details quantum mechanics to put it a bit too simply is our theory of the submicroscopic world this world is not so easily accessible for observations as macroscopic physics

amazon com physics of atoms and molecules 9780582356924 bransden - Nov 13 2022
web jan 1 2003 b h bransden is emeritus professor of theoretical physics at the university of durham c j joachain is professor of theoretical physics at the university of brussels they are co authors of quantum mechanics also published by prentice hall

**quantum mechanics bransden joachain pdf document** - Mar 05 2022
web dec 13 2015 documents quantum mechanics bransden joachain of 821 match case limit results 1 per page upload omar sedano post on 13 dec 2015 2 019 views category

**solutions for the physics of atoms and molecules 1st numerade** - Apr 06 2022
web some applications of atomic physics 0 sections 4 questions step by step video answers explanations by expert educators for all the physics of atoms and molecules 1st by bransden b h h joachain c j only on numerade c

**physics of atoms and molecules core** - Feb 16 2023
web physics of atoms and molecules 2nd edition b h bransden and c j joachain prentice hall an imprint of pearson education harlow england london new york boston san francisco toronto sydney singapore hong kong tokyo seoul taipei new delhi cape town madrid mexico city amsterdam munich paris milan contents

**physics of atoms and molecules b h bransden charles jean joachain** - Aug 22 2023
web b h bransden charles jean joachain prentice hall 2003 business economics 1114 pages the study of atomic and molecular physics is a key component of undergraduate courses in physics

*physics of atoms and molecules brian harold bransden* - Jun 20 2023
web brian harold bransden charles jean joachain pearson education 2003 atoms 1114 pages the study of atomic and molecular physics is a key component of undergraduate courses in physics

**introduction to quantum mechanics book etdeweb osti gov** - Sep 11 2022
web misc etde 5121383 title introduction to quantum mechanics author bransden b h and joachain c j abstractnote a modern comprehensive introduction to the principles of non relativistic quantum mechanics with a variety of approximation methods and with the application of these methods to simple systems occurring in atomic nuclear

**quantum theory university of oxford** - Feb 04 2022
web quantum theory james sparks michaelmas term 2021 about these notes these are lecture notes for the part a quantum theory course which is a second year course in the

quantum mechanics 2nd edition bransden b h joachain c j - Jul 09 2022
web feb 7 2000 throughout the book bransden and joachain give equal importance to the wave and matrix formalisms of quantum mechanics a nice feature of this book is the presentation of the schrodinger equation in momentum space a

treatment not found in much detail in many undergrad texts

**action anglais 3e lv2 cahier d activita c s pdf** - Oct 02 2023

web action anglais 3e lv2 cahier d activita c s call research perspectives joy l egbert 2006 04 21 this work creates a foundation for the study and practice of computer assisted language learning and provides an overview of ways to conceptualize and to conduct research in call it posits that all approaches to research have a

*50 activités en anglais au cycle 2 primlangues education* - Jun 17 2022

web 50 activités en anglais au cycle 2 se donne pour objectif premier d aider les enseignants à mettre en place des enseignements de langue dès le cours préparatoire en raison de la récente extension des apprentissages de langues vivantes au cycle 2 le public visé celui des enfants de cycle 2 cp ce1 présente la caractéristique de commencer

**action anglais 3e lv2 cahier d activita c s full pdf rchat** - Aug 20 2022

web action anglais 3e lv2 cahier d activita c s getting the books action anglais 3e lv2 cahier d activita c s now is not type of inspiring means you could not isolated going next ebook store or library or borrowing from your associates to read them this is an very simple means to specifically acquire lead by on line this online revelation

action anglais 3e lv2 cahier d activités by bernard lacoste - Nov 22 2022

web jul 2 2023 action anglais 3e lv2 cahier d activités by bernard lacoste online book library thewritings book blogger 3 28 3 home erog3 id top secure fnac april 16th 2020 delf b1 200 activita s livre corriga s cd audio ra ussir son business plan 3e a d ma thodes outils et astuces gestion finance passeport anglais lv1 de la 6e a la 5e 11 12 ans

action anglais 3e lv2 cahier d activita c s book - Apr 27 2023

web action anglais 3e lv2 cahier d activita c s un an de nouveautés oct 13 2020 tout l allemand 6e 5e lv1 5e 4e 3e lv2 jan 16 2021 un cahier un cd audio des bandes dessinées pour progresser très vite à l oral comme à l écrit tout le programme d allemand de la 6e 5e lv1 et de la 5e 4e 3e lv2 en vingt

**saison 3 cahier d activités b1 languages direct** - Mar 15 2022

web saison 3 cahier d activités b1 paperback 144 pages workbook audio cd saison is a brand new four level french course for adults and covers levels a1 to b2 of the common european framework of reference for languages cefr the fourth level b2 is still in preparation the series encourages dynamic progression whilst developing vocabulary

*action anglais 3e lv2 cahier d activités paperback* - Sep 01 2023

web action anglais 3e lv2 cahier d activités on amazon com au free shipping on eligible orders action anglais 3e lv2 cahier d activités

**action anglais 3e lv2 cahier d activita c s pdf 2023 live hubitat** - Feb 11 2022

web action anglais 3e lv2 cahier d activita c s pdf upload mia r williamson 2 4 downloaded from live hubitat com on october

20 2023 by mia r williamson mcda professor bernard roy has had considerable influence on the development of these two broad areas list part one contains papers by jacques lesourne

*action anglais 3e lv2 cahier d activita c s 2022 legacy theoec* - Jul 19 2022

web action anglais 3e lv2 cahier d activita c s 5 5 choice lonely planet french phrasebook dictionary a pocket sized comprehensive language guide provides on the go language assistance great for language students and travellers looking to interact with locals and immerse themselves in local culture about lonely planet started in 1973

**apprendre l anglais cycle 3 méthode** - Apr 15 2022

web descriptif le dossier pédagogique apprendre l anglais au cycle 3 propose une méthode d enseignement de l anglais en cm1 et cm2 au travers d activités prêtes à l emploi dans les 5 compétences du cecrl elle allège considérablement le travail de préparation de l enseignant et permet aux élèves d apprendre l anglais d une façon ludique et attractive

**action anglais 3e lv2 cahier d activités by bernard lacoste** - May 29 2023

web the elements by securing the digital files of this action anglais 3e lv2 cahier d activités by bernard lacoste by online so once you demand the books speedily you can straight get it merely said the action anglais 3e lv2 cahier d activités by bernard lacoste is widely congruent with any devices to browse

**action anglais 3e lv2 cahier d activita c s graph safehousetech** - Oct 22 2022

web action anglais 3e lv2 cahier d activita c s 3 3 juillet aout 2001 penguin young people around the world are increasingly able to access english language media online for leisure purposes and interact with other users of english this book examines the extent of these phenomena their effect on language acquisition and their

*action anglais 3e lv2 cahier d activita c s uniport edu* - Dec 24 2022

web action anglais 3e lv2 cahier d activita c s 2 8 downloaded from uniport edu ng on october 5 2023 by guest of our world s raging crises of displacement the international baccalaureate ian hill 2010 volume 4 dr ian hill deputy director general of the ib charts the history of the organisation and the goal to create develop and implement a truly

**cours et programme d anglais 3ème schoolmouv** - Jan 25 2023

web je me connecte révisez gratuitement les cours d anglais pour la classe de 3ème en vidéo fiches de cours quiz et exercices

action anglais 3e lv2 cahier d activita c s full pdf askstage - Feb 23 2023

web action anglais 3e lv2 cahier d activita c s 2019 07 19 levy richardson rossignols merles grives et autres insectivores bod books on demand la liste exhaustive des ouvrages disponibles publiés en langue française dans le monde la liste des éditeurs et la liste des collections de langue française the giant s causeway

**action anglais 3e lv2 cahier d activita c s richard l allington** - Mar 27 2023

web right here we have countless ebook action anglais 3e lv2 cahier d activita c s and collections to check out we additionally

give variant types and in addition to type of the books to browse

**action anglais 3e lv2 cahier d activita c s db csda** - Jun 29 2023

web 4 action anglais 3e lv2 cahier d activita c s 2020 05 06 teachers who policed girls outfits to male coworkers who installed hidden cameras in women s restrooms but can her psychiatrist cure her or even discover what truly ails her a social treatise as well as a work of art alexandra alter new york times kim jiyoung born 1982

action anglais 3e lv2 cahier d activita c s pdf uniport edu - Jul 31 2023

web oct 2 2023 action anglais 3e lv2 cahier d activita c s 2 8 downloaded from uniport edu ng on october 2 2023 by guest director general of the ib charts the history of the organisation and the goal to create develop and implement a truly international curriculum and qualification languages in contact uriel weinreich 1979 01 01 this

free action anglais 3e lv2 cahier d activita c s - Sep 20 2022

web action anglais 3e lv2 cahier d activita c s espagnol 4e lv2 a1 a2 may 27 2022 un cahier pour réviser les points clés du programme d espagnol en 4e et s entraîner à son rythme à l écrit comme à l oral pour chaque point clé du programme de grammaire en

**action anglais 3e lv2 cahier d activita c s download only** - May 17 2022

web action anglais 3e lv2 cahier d activita c s 3 3 the contribution of jim cummins to bilingualism and bilingual education has been substantial and profound this reader provides a comprehensive compilation of his most important and influential texts the book also provides a detailed biographical introduction and a commentary on the growth of ideas