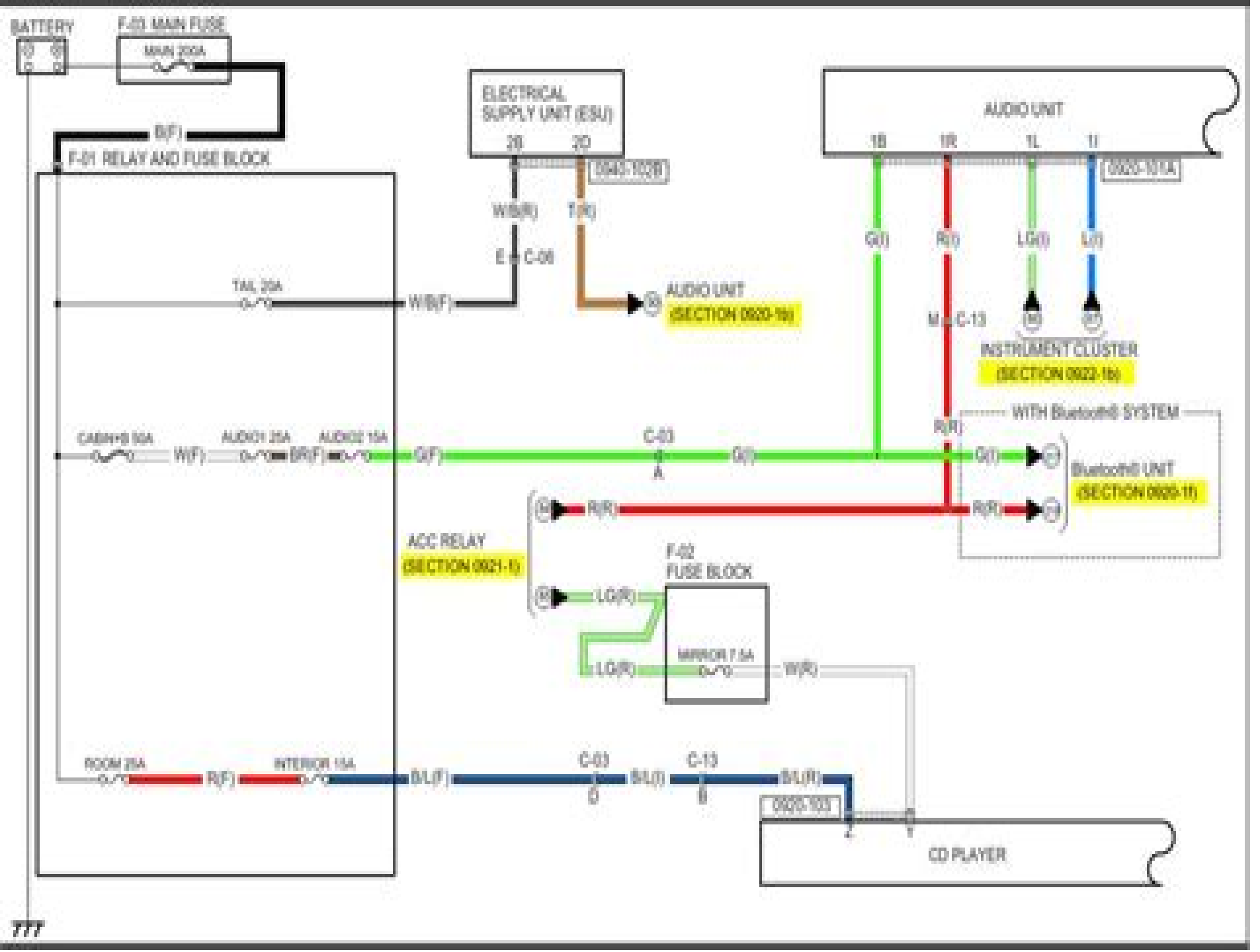
BATTERY
F-03 MAIN FUSE
MAIN 200A
B(F)
F-01 RELAY AND FUSE BLOCK
ELECTRICAL SUPPLY UNIT (ESU)
2B
2D
0940-102B
W/B(R)
T(R)
E C-06
TAIL 20A
W/B(F)
AUDIO UNIT
(SECTION 0920-1b)
AUDIO UNIT
1B
1R
1L
1I
0920-101A
G(I)
R(I)
LG(I)
L(I)
M C-13
INSTRUMENT CLUSTER
(SECTION 0922-1b)
WITH Bluetooth® SYSTEM
R(R)
CABIN+B 50A
W(F)
AUDIO1 25A
BR(F)
AUDIO2 15A
G(F)
C-03
A
G(I)
G(I)
Bluetooth® UNIT
(SECTION 0920-1f)
R(R)
R(R)
ACC RELAY
(SECTION 0921-1)
F-02
FUSE BLOCK
LG(R)
LG(R)
MIRROR 7.5A
W(R)
ROOM 25A
R(F)
INTERIOR 15A
B/L(F)
C-03
D
B/L(I)
C-13
B
B/L(R)
0920-103
Z
Y
CD PLAYER

# Mazda Miata System Wiring

B Lingard

**Mazda Miata System Wiring:**

This book delves into Mazda Miata System Wiring. Mazda Miata System Wiring is a crucial topic that needs to be grasped by everyone, ranging from students and scholars to the general public. This book will furnish comprehensive and in-depth insights into Mazda Miata System Wiring, encompassing both the fundamentals and more intricate discussions.

1. This book is structured into several chapters, namely:
    - Chapter 1: Introduction to Mazda Miata System Wiring
    - Chapter 2: Essential Elements of Mazda Miata System Wiring
    - Chapter 3: Mazda Miata System Wiring in Everyday Life
    - Chapter 4: Mazda Miata System Wiring in Specific Contexts
    - Chapter 5: Conclusion
2. In chapter 1, the author will provide an overview of Mazda Miata System Wiring. This chapter will explore what Mazda Miata System Wiring is, why Mazda Miata System Wiring is vital, and how to effectively learn about Mazda Miata System Wiring.
3. In chapter 2, this book will delve into the foundational concepts of Mazda Miata System Wiring. The second chapter will elucidate the essential principles that must be understood to grasp Mazda Miata System Wiring in its entirety.
4. In chapter 3, this book will examine the practical applications of Mazda Miata System Wiring in daily life. This chapter will showcase real-world examples of how Mazda Miata System Wiring can be effectively utilized in everyday scenarios.
5. In chapter 4, the author will scrutinize the relevance of Mazda Miata System Wiring in specific contexts. This chapter will explore how Mazda Miata System Wiring is applied in specialized fields, such as education, business, and technology.
6. In chapter 5, the author will draw a conclusion about Mazda Miata System Wiring. This chapter will summarize the key points that have been discussed throughout the book.

This book is crafted in an easy-to-understand language and is complemented by engaging illustrations. This book is highly recommended for anyone seeking to gain a comprehensive understanding of Mazda Miata System Wiring.

https://staging.conocer.cide.edu/public/book-search/fetch.php/hip_hop_trackpak_apple_loops_for_garageband_and_logic.pdf

**Table of Contents Mazda Miata System Wiring**

1. Understanding the eBook Mazda Miata System Wiring

- The Rise of Digital Reading Mazda Miata System Wiring
- Advantages of eBooks Over Traditional Books

2. Identifying Mazda Miata System Wiring
   - Exploring Different Genres
   - Considering Fiction vs. Non-Fiction
   - Determining Your Reading Goals
3. Choosing the Right eBook Platform
   - Popular eBook Platforms
   - Features to Look for in an Mazda Miata System Wiring
   - User-Friendly Interface
4. Exploring eBook Recommendations from Mazda Miata System Wiring
   - Personalized Recommendations
   - Mazda Miata System Wiring User Reviews and Ratings
   - Mazda Miata System Wiring and Bestseller Lists
5. Accessing Mazda Miata System Wiring Free and Paid eBooks
   - Mazda Miata System Wiring Public Domain eBooks
   - Mazda Miata System Wiring eBook Subscription Services
   - Mazda Miata System Wiring Budget-Friendly Options
6. Navigating Mazda Miata System Wiring eBook Formats
   - ePub, PDF, MOBI, and More
   - Mazda Miata System Wiring Compatibility with Devices
   - Mazda Miata System Wiring Enhanced eBook Features
7. Enhancing Your Reading Experience
   - Adjustable Fonts and Text Sizes of Mazda Miata System Wiring
   - Highlighting and Note-Taking Mazda Miata System Wiring
   - Interactive Elements Mazda Miata System Wiring
8. Staying Engaged with Mazda Miata System Wiring
   - Joining Online Reading Communities
   - Participating in Virtual Book Clubs
   - Following Authors and Publishers Mazda Miata System Wiring

9. Balancing eBooks and Physical Books Mazda Miata System Wiring
    - Benefits of a Digital Library
    - Creating a Diverse Reading Collection Mazda Miata System Wiring
10. Overcoming Reading Challenges
    - Dealing with Digital Eye Strain
    - Minimizing Distractions
    - Managing Screen Time
11. Cultivating a Reading Routine Mazda Miata System Wiring
    - Setting Reading Goals Mazda Miata System Wiring
    - Carving Out Dedicated Reading Time
12. Sourcing Reliable Information of Mazda Miata System Wiring
    - Fact-Checking eBook Content of Mazda Miata System Wiring
    - Distinguishing Credible Sources
13. Promoting Lifelong Learning
    - Utilizing eBooks for Skill Development
    - Exploring Educational eBooks
14. Embracing eBook Trends
    - Integration of Multimedia Elements
    - Interactive and Gamified eBooks

**Mazda Miata System Wiring Introduction**

In todays digital age, the availability of Mazda Miata System Wiring books and manuals for download has revolutionized the way we access information. Gone are the days of physically flipping through pages and carrying heavy textbooks or manuals. With just a few clicks, we can now access a wealth of knowledge from the comfort of our own homes or on the go. This article will explore the advantages of Mazda Miata System Wiring books and manuals for download, along with some popular platforms that offer these resources. One of the significant advantages of Mazda Miata System Wiring books and manuals for download is the cost-saving aspect. Traditional books and manuals can be costly, especially if you need to purchase several of them for educational or professional purposes. By accessing Mazda Miata System Wiring versions, you eliminate the need to spend money on physical copies. This not only saves you money but also reduces the environmental impact associated with book production and transportation. Furthermore, Mazda Miata System Wiring books and manuals for download are

incredibly convenient. With just a computer or smartphone and an internet connection, you can access a vast library of resources on any subject imaginable. Whether youre a student looking for textbooks, a professional seeking industry-specific manuals, or someone interested in self-improvement, these digital resources provide an efficient and accessible means of acquiring knowledge. Moreover, PDF books and manuals offer a range of benefits compared to other digital formats. PDF files are designed to retain their formatting regardless of the device used to open them. This ensures that the content appears exactly as intended by the author, with no loss of formatting or missing graphics. Additionally, PDF files can be easily annotated, bookmarked, and searched for specific terms, making them highly practical for studying or referencing. When it comes to accessing Mazda Miata System Wiring books and manuals, several platforms offer an extensive collection of resources. One such platform is Project Gutenberg, a nonprofit organization that provides over 60,000 free eBooks. These books are primarily in the public domain, meaning they can be freely distributed and downloaded. Project Gutenberg offers a wide range of classic literature, making it an excellent resource for literature enthusiasts. Another popular platform for Mazda Miata System Wiring books and manuals is Open Library. Open Library is an initiative of the Internet Archive, a non-profit organization dedicated to digitizing cultural artifacts and making them accessible to the public. Open Library hosts millions of books, including both public domain works and contemporary titles. It also allows users to borrow digital copies of certain books for a limited period, similar to a library lending system. Additionally, many universities and educational institutions have their own digital libraries that provide free access to PDF books and manuals. These libraries often offer academic texts, research papers, and technical manuals, making them invaluable resources for students and researchers. Some notable examples include MIT OpenCourseWare, which offers free access to course materials from the Massachusetts Institute of Technology, and the Digital Public Library of America, which provides a vast collection of digitized books and historical documents. In conclusion, Mazda Miata System Wiring books and manuals for download have transformed the way we access information. They provide a cost-effective and convenient means of acquiring knowledge, offering the ability to access a vast library of resources at our fingertips. With platforms like Project Gutenberg, Open Library, and various digital libraries offered by educational institutions, we have access to an ever-expanding collection of books and manuals. Whether for educational, professional, or personal purposes, these digital resources serve as valuable tools for continuous learning and self-improvement. So why not take advantage of the vast world of Mazda Miata System Wiring books and manuals for download and embark on your journey of knowledge?

### FAQs About Mazda Miata System Wiring Books

How do I know which eBook platform is the best for me? Finding the best eBook platform depends on your reading

preferences and device compatibility. Research different platforms, read user reviews, and explore their features before making a choice. Are free eBooks of good quality? Yes, many reputable platforms offer high-quality free eBooks, including classics and public domain works. However, make sure to verify the source to ensure the eBook credibility. Can I read eBooks without an eReader? Absolutely! Most eBook platforms offer web-based readers or mobile apps that allow you to read eBooks on your computer, tablet, or smartphone. How do I avoid digital eye strain while reading eBooks? To prevent digital eye strain, take regular breaks, adjust the font size and background color, and ensure proper lighting while reading eBooks. What the advantage of interactive eBooks? Interactive eBooks incorporate multimedia elements, quizzes, and activities, enhancing the reader engagement and providing a more immersive learning experience. Mazda Miata System Wiring is one of the best book in our library for free trial. We provide copy of Mazda Miata System Wiring in digital format, so the resources that you find are reliable. There are also many Ebooks of related with Mazda Miata System Wiring. Where to download Mazda Miata System Wiring online for free? Are you looking for Mazda Miata System Wiring PDF? This is definitely going to save you time and cash in something you should think about.

**Find Mazda Miata System Wiring :**

hip-hop trackpak apple loops for garageband and logic
**hiking the great basin**
**historia oculta de la iglesia**
**hispanic mental health research a refere**
hispanics in united states history
**hiroshima murals the art of iri maruki and toshi maruki**
~~his brothers keeper a story from the edge of medicine~~
historia de las religiones
~~histoire de frank~~
historic britain factfinders
**historia ecclesia abbendonensis the history of the church of abingdon**
histoire du develo bio v1
hills snyder gloville
~~hillier practicals hardy plants~~
historia interminable

**Mazda Miata System Wiring :**

Annual Mandatory Exam | Information Services Welcome to the 2023 Annual Mandatory Exam. Please read the following as there have been some changes made to the AME, and to ensure you receive credit for ... Annual Mandatory Education 2014 Suny Downstate ... Annual Mandatory Education. 2014 Suny Downstate Medical. Center Pdf Pdf. INTRODUCTION Annual Mandatory. Education 2014 Suny Downstate. Annual Mandatory Education - Fill Online, Printable, ... Employees: Annual mandatory education is generally required for employees in specific industries or professions. This can include healthcare professionals, ... SUNY Downstate Health Sciences University We offer MS, MPH and MHA degree programs in occupational therapy, medical informatics and public health. Our doctoral-level programs prepare research medical ... SUNY Downstate Medical Center SUNY Downstate Medical Center is a public medical school and hospital ... 2010 was SUNY Downstate's sesquicentennial, celebrating 150 years in medical education. Dr. Megan Walsh, MD – New Hyde Park, NY | Pediatrics St. Bonaventure's Dr. Megan Walsh Awarded National Endowment for Humanities FellowshipApril 23rd, 2019. Annual Mandatory Education 2014 Suny Downstate ... David H Berger, MD, MHCM - Chief Executive Officer Experience. SUNY Downstate Medical Center. 3 years 5 months. A Global Health Elective for US Medical Students: The 35 ... by DM Bruno · 2015 · Cited by 19 — This elective is restricted to fourth year medical students who have successfully completed all formal academic requirements of the first 3 ... Edeline Mitton A 20-year veteran of the State University of New York (SUNY) system, Edeline Mitton, MEd, is the director of the Office of Continuing Medical Education at ... AAMC Uniform Clinical Training Affiliation Agreement The AAMC Uniform Clinical Training Affiliation Agreement is a simple, one-size-fits-all agreement that resides on AAMC's website. At its June 2014 meeting, the ... Microsoft SQL Server 2012 Unleashed by Rankins, Ray Microsoft SQL Server 2012 Unleashed [Rankins, Ray, Bertucci, Paul, Gallelli, Chris, Silverstein, Alex T., Cotter, Hilary] on Amazon.com. Microsoft SQL Server 2012 Unleashed by Rankins, Ray ... Microsoft SQL Server 2012 Unleashed by Rankins, Ray Published by Sams Publishing 1st (first) edition (2013) Paperback [Ray Rankins] on Amazon.com. Microsoft SQL Server 2012 Unleashed Buy the print version of¿Microsoft SQL Server 2012 Unleashed and get the eBook version for free! eBook ... By Ray Rankins, Paul Bertucci, Chris Gallelli, Alex T. ray rankins paul bertucci chris Microsoft SQL Server 2005 Unleashed by Ray Rankins, Paul Bertucci, Chris Gallelli, Alex T. Silverstein and a great selection of related books, ... Microsoft SQL Server 2012 Unleashed book by Ray Rankins Buy a cheap copy of Microsoft SQL Server 2012 Unleashed book by Ray Rankins. Buy the print version of Microsoft SQL Server 2012 Unleashed and get the eBook ... Microsoft SQL Server 2012 Unleashed Microsoft SQL Server 2012 Unleashed. ... by Ray Rankins, Paul Bertucci, Chris Gallel. No reviews. Choose a condition ... Microsoft SQL Server 2012 Unleashed: | Guide books Dec 13, 2013 — Buy the print version of Microsoft SQL Server 2012 Unleashed and get the eBook version for free! ... Ray Rankins. Publication Years1996 - 2015 ... Microsoft® SQL Server 2012 Unleashed Ray Rankins is owner and president of Gotham Consulting Services, Inc. (http ... Ray is coauthor of Microsoft SQL

Server 2008 R2 Unleashed, Microsoft SQL Server ... Microsoft SQL Server 2012 Unleashed Microsoft SQL Server 2012 Unleashed. 8 ratings by Goodreads · Ray Rankins, Paul Bertucci, Chris Gallelli, Alex T. Silverstein, Hilary Cotter. Published by Sams ... Pre-Owned Microsoft SQL Server 2012 Unleashed ... Pre-Owned Microsoft SQL Server 2012 Unleashed Paperback 0672336928 9780672336928 Ray Rankins, Paul Bertucci, Chris Gallelli, Alex T. Silverstein, Hilary Cotter. Analysing Architecture: Unwin, Simon Clear and accessible, Analysing Architecture opens a fresh way to understanding architecture. It offers a unique 'notebook' of architectural strategies to ... Analysing Architecture - 5th Edition Simon Unwin is Emeritus Professor of Architecture at the University of Dundee, Scotland. He has lived in Great Britain and Australia, and taught or lectured on ... Analysing Architecture: Unwin, Simon This book establishes a systematic method in analyzing architecture. It explains how architectural elements are combined together to form designs that could ... Analysing Architecture - Simon Unwin This book presents a powerful impetus for readers to develop their own capacities for architectural design. Analysing Architecture Notebooks - Book Series Written by bestselling author Simon Unwin, the series follows his well-known style and features his beautiful, high-quality drawings. Each book starts with an ... Analysing Architecture Simon Unwin This channel hosts short videos related to the books I have written for student architects, which include: Analysing Architecture, the Universal Language of ... Analysing Architecture | Simon Unwin - Taylor & Francis eBooks by S Unwin · 2009 · Cited by 592 — Clear and accessible, Analysing Architecture opens a fresh way to understanding architecture. It offers a unique 'notebook' of architectural ... Analysing Architecture: The universal language of place- ... Simon Unwin is a freelance writer and lecturer based in Cardiff, UK. He is a registered architect but concentrates on writing about architecture and teaching ... Analysing Architecture - Simon Unwin Analysing Architectureoffers a unique 'notebook' of architectural strategies to present an engaging introduction to elements and concepts in architectural ...