NOTE:
Please read all instructions carefully before using this product

Table of Contents

Safety Notice

Hardware Identifier

Assembly Instruction

Parts List

Warranty

Ordering Parts

Model
PHE 2000

Retain This Manual for Reference

05-31-04

OWNER'S MANUAL

IMPEX
FITNESS PRODUCTS

POWERHOUSE ELITE
PHE 2000

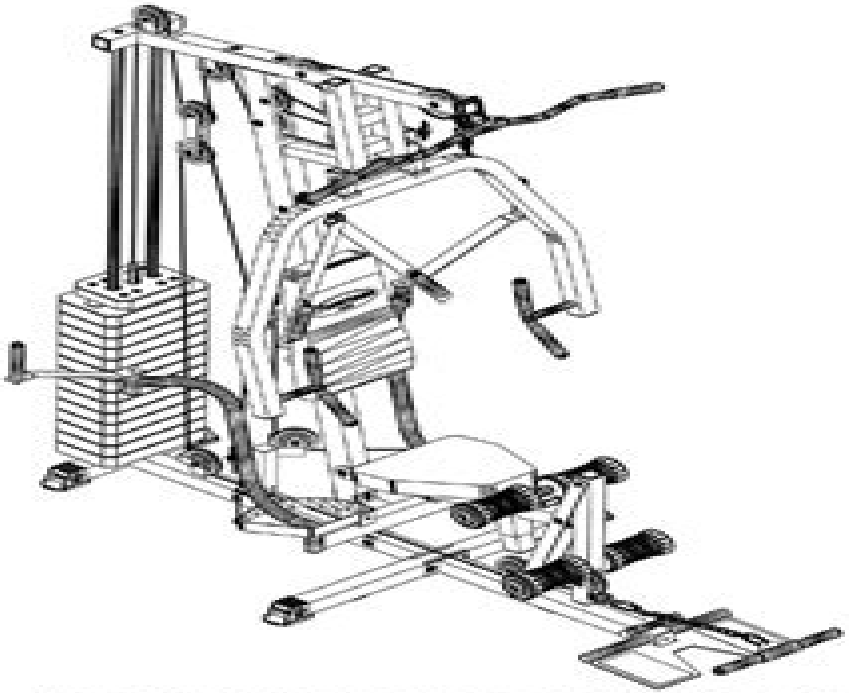

IMPEX FITNESS PRODUCTS
14777 DON JULIAN RD., CITY OF INDUSTRY, CA 91746
Tel: (800) 999-8899 Fax: (626) 961-9966
www.impex-fitness.com
info@impex-fitness.com

Manual For Powerhouse Elite

Jeff Karzen

Manual For Powerhouse Elite:

The Official Vintage Guitar Magazine Price Guide Alan Greenwood,Gil Hembree,2009-10-01 Uses market research and analysis to provide values for vintage or collectible instruments including information on more than eighteen hundred brands accompanied by eleven hundred photographs **Playgrounds to the Pros** Jeff Karzen,2023-02-07 Howard Nathan A J Guyton Sergio McClain Marcus Griffin Frank Williams Shaun Livingston This dazzling constellation of talent helped make Peoria a prep basketball hotbed from the 1980s to the 2000s Jeff Karzen takes readers inside the lives of the players coaches and others who defined an era that produced six state titles and four Illinois Mr Basketball winners Drawing on dozens of in depth interviews Karzen tells the stories behind the on court triumphs while providing a panorama of the entire Peoria scene the rivalries and relationships the families and friendships the hopes and hard work Karzen also follows the players into their Division 1 and NBA careers and pays special attention to the pipeline that by connecting Peoria to Champaign Urbana powered one of the most successful periods in Fighting Illini basketball history Intense and intimate Playgrounds to the Pros chronicles a basketball golden age in America s quintessential blue collar town Eu-china Relationship, The: European Perspectives - A Manual For Policy Makers Kerry Brown,2014-11-27 This book brings together 30 papers commissioned from 2011 to 2013 by the EU funded Europe China Research and Advice Network ECRAN These papers thematically grouped in sections on economics society and politics were written by some of the world s leading China experts in Europe and give a European perspective of this complex relationship The papers provide a broad overview of how Europeans see the key challenges currently faced by China and Europe as well as a unique insight into the related policy aspects of the vexed and complex relationship of the two largest trading partners in the world The EU China Relationship European Perspectives is written in a highly pragmatic manner focusing on specific political economic and social issues that impact on international relations It is an essential EU toolkit and policy handbook for academics and policy makers in government and business who are engaging with China not just in the EU but across the world **The ^AOxford Guide to ^IThe Book of Common Prayer^R** Charles Hefling,Cynthia Shattuck,2006-07-01 The Book of Common Prayer runs like a golden thread through the history of the Church of England and the worldwide Anglican Communion The Oxford Guide to the Book of Common Prayer is the first comprehensive guide to the history and usage of the original Book of Common Prayer and its numerous descendants throughout the world It shows how a seminal text for Christian worship and devotion has inspired a varied family of religious resources that have had an influence far beyond their use in the churches of a single tradition *Mergent OTC Unlisted Manual* ,2003 Maine Register; Or, State Year-book and Legislative Manual ,1987 *Peak Performance for Soccer* Alex Calder,Adam Centofanti,2022-12-01 In this book over 40 of the world s leading practitioners working in elite soccer over 6 continents share advanced knowledge of the environment as well as a scientific understanding of the game and players This book explores those traits at an intricate level through shared experiences of some of the best performance coaches working

in elite soccer The content in this book is derived from practical and evidence based concepts that have been applied at the elite level Uncovering the coaching strategies as well as contemporary issues in elite soccer this comprehensive textbook illustrates what it takes to thrive as a performance coach at the top level Collaborating with the industry leaders in soccer the chapters address a myriad of topics such as the multiple roles and responsibilities youth development strength and conditioning application nutrition and recovery strategies tracking and monitoring fitness and fatigue powerful communication methods and staff cohesion and return to play and injury prevention strategies Peak Performance for Soccer is essential reading for all coaches and practitioners at any level who work in soccer Alex Calder is the head of sports science with the Houston Dynamo competing in Major League Soccer MLS He is an accredited level 3 elite coach with the Australian Strength and Conditioning Association ASCA as well as holding accreditations through the National Strength and Conditioning Association NSCA and Collegiate Strength and Conditioning Coaches Association CSCCa Adam Centofanti is currently the head of fitness for the Seattle Sounders FC having previously served as the head of academy strength and conditioning for Houston Dynamo FC Formally with Melbourne City FC Adam held various roles with the club including conditioning coach sports scientist in the academy sector as well as overseeing the women s performance program achieving multiple championships Buying Guide 2008 Consumer Reports,2007-11-13 Leather Marketing Genius Barrett Williams,ChatGPT,2025-10-08 Unlock the secrets to mastering the leather industry with Leather Marketing Genius a revolutionary guide designed for brands aspiring to stand out in a competitive market This comprehensive eBook takes you on a transformative journey through the rich history and dynamic current landscape of the leather world offering insights and strategies that will elevate your brand to new heights Discover how to carve out a unique identity with cutting edge techniques for positioning your leather products Learn to tell your brand s story in a way that captivates and resonates setting you apart in a saturated market As sustainability becomes more critical than ever Leather Marketing Genius provides a deep dive into tapping into the burgeoning demand for eco friendly leather goods identifying sub niches and connecting directly with the conscious consumer Craft a formidable marketing strategy that seamlessly blends traditional approaches with modern digital tactics Equip yourself with the knowledge to build an online presence that commands attention and converts visitors into loyal customers Harness the undeniable power of social media engage audiences with compelling storytelling and create genuine connections with the influencers who can amplify your brand s message The eBook guides you to leverage e commerce optimize visual marketing and design impactful email campaigns It unveils the vital steps for forging successful retail partnerships maximizing trade show opportunities and effectively measuring your marketing strategies success Stay agile and innovative as you navigate market shifts embracing emerging technologies and trends that will ensure your brand s resilience in the decades to come Leather Marketing Genius is not just a book it s your blueprint for thriving in the leather industry equipping you with the tools you need to adapt innovate and succeed Transform your

marketing strategy today and build a brand that s not only seen but remembered Your future in the leather market starts here **Investigative Journalism** Hugo de Burgh,Paul Lashmar,2021-03-28 This third edition maps the new world of investigative journalism where technology and globalisation have connected and energised journalists whistle blowers and the latest players with far reaching consequences for politics and business worldwide In this new edition expert contributors demonstrate how crowdsourcing big data globalisation of information and changes in media ownership and funding have escalated the impact of investigative journalists The book includes case studies of investigative journalism from around the world including the exposure of EU corruption the destruction of the Malaysian environment and investigations in China Poland and Turkey From Ibero America to Nigeria India to the Arab world investigative journalists intensify their countries evolution by inquisition and revelation This new edition reveals how investigative journalism has gone digital and global Investigative Journalism is essential for all those intending to master global politics international relations media and justice in the 21st century

Immerse yourself in the artistry of words with Crafted by is expressive creation, Discover the Artistry of **Manual For Powerhouse Elite** . This ebook, presented in a PDF format (PDF Size: *), is a masterpiece that goes beyond conventional storytelling. Indulge your senses in prose, poetry, and knowledge. Download now to let the beauty of literature and artistry envelop your mind in a unique and expressive way.

https://staging.conocer.cide.edu/public/Resources/Documents/jack_kapoor_personal_finance.pdf

Table of Contents Manual For Powerhouse Elite

1. Understanding the eBook Manual For Powerhouse Elite
    - The Rise of Digital Reading Manual For Powerhouse Elite
    - Advantages of eBooks Over Traditional Books
2. Identifying Manual For Powerhouse Elite
    - Exploring Different Genres
    - Considering Fiction vs. Non-Fiction
    - Determining Your Reading Goals
3. Choosing the Right eBook Platform
    - Popular eBook Platforms
    - Features to Look for in an Manual For Powerhouse Elite
    - User-Friendly Interface
4. Exploring eBook Recommendations from Manual For Powerhouse Elite
    - Personalized Recommendations
    - Manual For Powerhouse Elite User Reviews and Ratings
    - Manual For Powerhouse Elite and Bestseller Lists
5. Accessing Manual For Powerhouse Elite Free and Paid eBooks
    - Manual For Powerhouse Elite Public Domain eBooks
    - Manual For Powerhouse Elite eBook Subscription Services
    - Manual For Powerhouse Elite Budget-Friendly Options

6. Navigating Manual For Powerhouse Elite eBook Formats
    - ePub, PDF, MOBI, and More
    - Manual For Powerhouse Elite Compatibility with Devices
    - Manual For Powerhouse Elite Enhanced eBook Features
7. Enhancing Your Reading Experience
    - Adjustable Fonts and Text Sizes of Manual For Powerhouse Elite
    - Highlighting and Note-Taking Manual For Powerhouse Elite
    - Interactive Elements Manual For Powerhouse Elite
8. Staying Engaged with Manual For Powerhouse Elite
    - Joining Online Reading Communities
    - Participating in Virtual Book Clubs
    - Following Authors and Publishers Manual For Powerhouse Elite
9. Balancing eBooks and Physical Books Manual For Powerhouse Elite
    - Benefits of a Digital Library
    - Creating a Diverse Reading Collection Manual For Powerhouse Elite
10. Overcoming Reading Challenges
    - Dealing with Digital Eye Strain
    - Minimizing Distractions
    - Managing Screen Time
11. Cultivating a Reading Routine Manual For Powerhouse Elite
    - Setting Reading Goals Manual For Powerhouse Elite
    - Carving Out Dedicated Reading Time
12. Sourcing Reliable Information of Manual For Powerhouse Elite
    - Fact-Checking eBook Content of Manual For Powerhouse Elite
    - Distinguishing Credible Sources
13. Promoting Lifelong Learning
    - Utilizing eBooks for Skill Development
    - Exploring Educational eBooks
14. Embracing eBook Trends
    - Integration of Multimedia Elements

- Interactive and Gamified eBooks

Manual For Powerhouse Elite Introduction

Manual For Powerhouse Elite Offers over 60,000 free eBooks, including many classics that are in the public domain. Open Library: Provides access to over 1 million free eBooks, including classic literature and contemporary works. Manual For Powerhouse Elite Offers a vast collection of books, some of which are available for free as PDF downloads, particularly older books in the public domain. Manual For Powerhouse Elite : This website hosts a vast collection of scientific articles, books, and textbooks. While it operates in a legal gray area due to copyright issues, its a popular resource for finding various publications. Internet Archive for Manual For Powerhouse Elite : Has an extensive collection of digital content, including books, articles, videos, and more. It has a massive library of free downloadable books. Free-eBooks Manual For Powerhouse Elite Offers a diverse range of free eBooks across various genres. Manual For Powerhouse Elite Focuses mainly on educational books, textbooks, and business books. It offers free PDF downloads for educational purposes. Manual For Powerhouse Elite Provides a large selection of free eBooks in different genres, which are available for download in various formats, including PDF. Finding specific Manual For Powerhouse Elite, especially related to Manual For Powerhouse Elite, might be challenging as theyre often artistic creations rather than practical blueprints. However, you can explore the following steps to search for or create your own Online Searches: Look for websites, forums, or blogs dedicated to Manual For Powerhouse Elite, Sometimes enthusiasts share their designs or concepts in PDF format. Books and Magazines Some Manual For Powerhouse Elite books or magazines might include. Look for these in online stores or libraries. Remember that while Manual For Powerhouse Elite, sharing copyrighted material without permission is not legal. Always ensure youre either creating your own or obtaining them from legitimate sources that allow sharing and downloading. Library Check if your local library offers eBook lending services. Many libraries have digital catalogs where you can borrow Manual For Powerhouse Elite eBooks for free, including popular titles.Online Retailers: Websites like Amazon, Google Books, or Apple Books often sell eBooks. Sometimes, authors or publishers offer promotions or free periods for certain books.Authors Website Occasionally, authors provide excerpts or short stories for free on their websites. While this might not be the Manual For Powerhouse Elite full book , it can give you a taste of the authors writing style.Subscription Services Platforms like Kindle Unlimited or Scribd offer subscription-based access to a wide range of Manual For Powerhouse Elite eBooks, including some popular titles.

FAQs About Manual For Powerhouse Elite Books

How do I know which eBook platform is the best for me? Finding the best eBook platform depends on your reading

preferences and device compatibility. Research different platforms, read user reviews, and explore their features before making a choice. Are free eBooks of good quality? Yes, many reputable platforms offer high-quality free eBooks, including classics and public domain works. However, make sure to verify the source to ensure the eBook credibility. Can I read eBooks without an eReader? Absolutely! Most eBook platforms offer web-based readers or mobile apps that allow you to read eBooks on your computer, tablet, or smartphone. How do I avoid digital eye strain while reading eBooks? To prevent digital eye strain, take regular breaks, adjust the font size and background color, and ensure proper lighting while reading eBooks. What the advantage of interactive eBooks? Interactive eBooks incorporate multimedia elements, quizzes, and activities, enhancing the reader engagement and providing a more immersive learning experience. Manual For Powerhouse Elite is one of the best book in our library for free trial. We provide copy of Manual For Powerhouse Elite in digital format, so the resources that you find are reliable. There are also many Ebooks of related with Manual For Powerhouse Elite. Where to download Manual For Powerhouse Elite online for free? Are you looking for Manual For Powerhouse Elite PDF? This is definitely going to save you time and cash in something you should think about.

Find Manual For Powerhouse Elite :

jack kapoor personal finance
jaguar xk8 1997 workshop service manual repair
~~jacobsen b40 blower manual~~
izabella st james book
jaguar xj8 repair manual
jaguar xj8 1997 owners repair manual
jacobs cabin jacobs cabin english edition
izusu rodeo manual
jacuzzi 365 manual
jablotron ems interface
jaguar xjr 2000 service manual
jan 14 c3 international paper
jackie robinson john keene poem 1949
jacobsen lf 3400 fairway mower repair manual
~~james bastien easy piano classics~~

Manual For Powerhouse Elite :

tssn isdn online tutorials library - Mar 01 2022
web this is a circuit switched telephone network system which also provides access to packet switched networks the model of a practical isdn is as shown below isdn supports a variety of services a few of them are listed below voice calls facsimile videotext teletext electronic mail database access data transmission and voice
tssn online tutorials library - Apr 02 2022
web a telecommunication network is a group of systems that establishes a distant call the switching systems are part of a telecommunication network the switching stations provide connection between different subscribers such switching
telecommunication switching systems and networks - May 15 2023
web telecommunication switching systems and networks t viswanathan amazon com tr kitap
telecommunication switching systems and - Aug 18 2023
web jan 8 2015 the text covers in a single volume both switching systems and telecommunications networks the book begins with a brief discussion on the evolution of telecommunication it then goes on
telecommunication switching and networks academia edu - Jul 05 2022
web telecommunication deals with the service of providing electrical communication at a distance the service is supported by an industry that depends on a large body of increasingly specialized scientists engineers and craftspeople
tssn tutorial - Nov 09 2022
web tssn switching systems elements of a switching system tssn strowger switching system tssn switching mechanisms tssn common control tssn touch tone dial telephone tssn crossbar switching crossbar switch configurations tssn crosspoint technology tssn stored program control tssn software
tssn introduction online tutorials library - Aug 06 2022
web switching systems this network connection cannot be simply made with telephone sets and bunch of wires but a good system is required to make or break a connection this system is known as the switching system or the switching office or the exchange
telecommunication switching systems and networks by - Feb 12 2023
web telecommunication switching systems and networks by thiagarajan vishwanathan uploaded by santoshdarekar copyright attribution non commercial by nc available formats download as pdf or read online from scribd flag for inappropriate content save 100 0 embed share print download now of 289 you might also like
telecommunication switching and networks google books - Dec 10 2022
web view all this book telecommunication switching and networks is intended to serve as a textbook for undergraduate

course of information technology electronics and communication engineering and

tssn switching systems online tutorials library - Jan 11 2023

web a telecommunication network is a group of systems that establishes a distant call the switching systems are part of a telecommunication network the switching stations provide connection between different subscribers such switching systems can be grouped to form a telecommunication network the switching systems are connected using

switching systems article about switching systems by the - Jan 31 2022

web switching system fundamentals telecommunications switching systems generally perform three basic functions they transmit signals over the connection or over separate channels to convey the identity of the called and sometimes the calling address for example the telephone number and alert ring the called station they establish

telecommunication switching systems and - Apr 14 2023

web it fulfils the need for a suitable textbook in the area of telecommunication switching systems and networks the text covers in a single volume both switching systems and telecommunications

telecommunication switching systems and networks second - Jun 04 2022

web manav bhatnagar preface to the first edition today s telecommunication network is a complex interconnection of a variety of heterogeneous switching systems electromechanical and electronic systems direct and common control systems and hard wired and stored program control systems coexist

download telecommunication switching systems and - Oct 08 2022

web apr 24 2019 title telecommunication switching systems and networks language english size 9 59 mb pages 507 format pdf year 1992 edition 1 author viswanathan thiagarajan contents of the book chapter 1 introduction chapter 2 strowger switching systems chapter 3 crossbar switching chapter 4 electronic

switching systems springerlink - May 03 2022

web central office switching network distribution stage these keywords were added by machine and not by the authors this process is experimental and the keywords may be updated as the learning algorithm improves download chapter pdf references hills m t telecommunications switching principles cambridge mass mit press 1979

telecommmunication switching systems and networks - Sep 19 2023

web may 18 2018 telecommmunication switching systems and networks thiagarajan viswanathan text thiagarajan viswanathan free download borrow and streaming internet archive

telecommunication switching systems and networks - Jun 16 2023

web request pdf on feb 28 2015 thiagarajan viswanathan and others published telecommunication switching systems and networks find read and cite all the research you need on researchgate

telecommunications network benefits types components - Sep 07 2022
web telecommunications network electronic system of links and switches and the controls that govern their operation that allows for data transfer and exchange among multiple users when several users of telecommunications media wish to communicate with one another they must be organized into some
telecommunication switching systems and networks - Jul 17 2023
web telecommunication switching systems and networks by viswanathan thiagarajan author publication date 2015 topics telecommunication switching systems telecommunication systems publisher
telecommunication switching systems and - Mar 13 2023
web jan 1 1992 the text covers in a single volume both switching systems and telecommuni cations networks the book gives a detailed discussion on topics such as fibre optic communication systems and
building the cowboy chuck wagon circa 1860 - Jul 06 2023
web the plans six plan sheets are provided many drawings on the plans are done in an isometric format illustrating the construction sequence and identifying the parts and their placement note that sheet 6 is for parts identification only and is not to scale 2 making allowances along the way
chuck wagon woodworking plan woodworkersworkshop - Dec 31 2022
web enjoy a real western tailgate party this wagon has a large cabinet to hold supplies gate folds down to make a generous serving platform can be used in the family room or outdoors as pictured wagon is made mostly from 1x4 and
chuck wagon conversion hansen wheel and wagon shop - Oct 29 2022
web let us help you create the chuck wagon of your dreams today our basic chuck wagon conversion package for 6 385 includes wagon bows installed using wagon clips custom chuck box with door that folds down into a large work surface barrel platform with 15 gallon oak hinged lid water barrel jockey box on the front of the wagon
chuckwagon plans - Aug 07 2023
web we have the perfect product for you with our complete set of plans we will show you how you can easily build your own chuck wagon with the plans you can buy here you can customize yours in a manner that fits your needs the video below will give you a quick tour a chuckwagon tour watch on
cowboy chuck wagon 1860 by johnb40 model ship world - Apr 03 2023
web aug 31 2017 future builds the schooner bluenose scale 1 48 pof scratch build gene bodnar practicum plans from modelshipbuilder com hms victory scale 1 64 or 1 48 pof scratch build john mckay s plans current builds 42ft longboat armed for war 1834 scale 1 36 pof scratch build plans from a n c r e
chuck wagon plans hansen wheel and wagon shop - Oct 09 2023

web sep 1 2023 description specifications build your own sentimental symbol of the western legacy of the ranch and trail cowboy using these scale drawings as plans includes information on how to make a covered wagon and add components to complete your chuck wagon plans can be used to build a full sized or model sized authentic chuck

chuck wagon plans build it hitchman homestead - Nov 29 2022

web wagon sections wagon axles brakes train parts seating hitch wagon it covered wagon components boxes accessories camp set barrels canvas arch

historic chuck box basic hansen wheel and wagon shop - Mar 22 2022

web add to wishlist description specifications our authentic style chuck box has four removable drawers one 13 drawer and three 9 drawers chuck box door is attached with specialized hinges and folds down to create a roomy work surface quality parts and construction call us for additional details 605 996 8754

chuck wagon plans 35 wagon plans build ideas wagon wooden wagon - Sep 08 2023

web mar 14 2022 construct autochthonous own mushy symbol of the western legacy of this ranch and trail cowboy use these scale drawings as plans includes company in how to making a coverage wagon and add components to complete thy chuck cart plans can be used to build one full sized or model sized authentic chuck carrier

build it hitchman homestead - Sep 27 2022

web starting at 15 000 built on a 5x10 flatbed trailer our towable version is the only chuck wagon we know of that goes 65 miles an hour this build is towable by any vehicle with a trailer ball and is the only wagon we produce intended for highway use the bonnet travels in place while the decorative wheels rotate up into travel mode

start to finish chuck wagon box engels coach shop youtube - May 04 2023

web oct 7 2022 shop the engelscoachshop store the complete process of building a chuck wagon box from scratch it is placed on an original restored undercarriage also viewable in the synoptic playlist i

custom used chuck wagons covered wagons sheep wagons - Feb 01 2023

web our custom and used chuck wagons sheep camps and covered wagons are distinctively western icons we incorporate all the original elements into our custom chuck wagons covered wagons and sheepwagons to preserve the colorful history of the pioneers and the western cowboy lore of the era

model trailways chuck wagon 1 12 scale model expo - Apr 22 2022

web model trailways cowboy chuck wagon c 1860 1 12 scale wood and metal kit model trailways kit contains everything you need to build an authentically detailed scale model basswood parts are laser cut for a perfect fit true to life accessories include brass rod rings eyebolts and photo etch detailing spoked wooden wheels with machined

wagon and cannon plans and model kits hansen wheel - Mar 02 2023

web woodworkers and horse driving enthusiasts alike will find our plans and kits to be just what they are looking for our wagon and cannon plans are designed for use with a scale ruler from these scale plans you can build small models or full size vehicles

get your plans chuckwagonplans com - Jun 05 2023

web chuckwagonplans is a trademark of evergreen design company share this we are proud to announce we know have our plans available for digital delivery for only 39 95 15 95 a 40 savings also available get your hard copy chuck wagon plans for only 49 95 19 95 a 40 savings for a limited time only

chuckwagon wikipedia - Jul 26 2022

web a chuckwagon is a type of field kitchen covered wagon historically used for the storage and transportation of food and cooking equipment on the prairies of the united states and canada such wagons formed part of a wagon train of settlers or fed traveling workers such as cowboys or loggers

cowboys and chuckwagon cooking building a fire box for - Feb 18 2022

web jan 5 2011 western history and information environment the chucking wagon and cattle drives cast iron cooking cowboy coffees recipes stories and much more the preservation of western cultural and the american cowboy sharing aforementioned history of and early trail drives and chuck wagon and those whom pioneered wild land

history of the chuck wagon national cowboy museum - Aug 27 2022

web explore the west the chuck wagon on a cattle drive the chuck wagon was as important to the drive s success as a good pair of cowboy boots were to the cowboy with a dutch oven and some sour dough a chuck wagon cook could feed an entire trail crew

chuck wagon woodworking plans reality the - Jun 24 2022

web chuck wagon woodworking plans browsing for appropriate woodworking strategies that can eventually aid you to achieve excellent woodworking jobs can be a time consuming job in this article we will discover more on chuck wagon woodworking plans and factors to consider when choosing a woodworking strategy

chuck wagon plans for sale ebay - May 24 2022

web chuck wagon scale plans for full or model size wagon opens in a new window or tab brand new c 44 58 or best offer c 29 82 shipping from united states 17 watchers chuck wagon camping trailer tag along kitchen how to build plans opens in a new window or tab pre owned c 14 73 top rated seller

pesca de atún rojo dónde cuándo y cómo mundo pesca - Sep 18 2023

web para la pesca de ejemplares de atún rojo grandes la pesca al brumeo con sardinas y boquerones da los mejores resultados por lo que hace a los túnidos más pequeños de 10 a 60 kilos se pescan más con crankbait o chorro silbante en

curricán rápido también puedes optar por el casting o el heavy jigging

jc mackintosh un malagueño pionero en la pesca sostenible del atún rojo - Jan 10 2023

web oct 14 2023 jc mackintosh un malagueño pionero en la pesca sostenible del atún rojo hace seis años importó la técnica japonesa ike jime cada pieza se captura una a una para minimizar el sufrimiento

agricultura prohíbe temporalmente la pesca de atún rojo para la - Jul 04 2022

web jun 21 2022 madrid 21 jun europa press la dirección general de ordenación pesquera y acuicultura ha prohibido temporalmente la pesca tenencia a bordo y desembarque de ejemplares de atún

descubre la emocionante pesca deportiva del atún rojo en el - Jun 15 2023

web jul 9 2023 la pesca deportiva del atún rojo en el mediterráneo ha sido una de las actividades más emocionantes para los amantes de la pesca deportiva este pez gigante que puede alcanzar los 300 kg de peso y los 3 metros de longitud ha sido tradicionalmente una de las especies más valoradas por los pescadores deportivos

 cómo pescar atún rojo 2023 lalicenciadepesca com - Sep 06 2022

web la pesca deportiva de atunes rojos es una de las más requeridas en los charters y salidas de pesca recreativa esto sí con la salvedad de hacer esta de manera sostenible en régimen de captura y suelta cuando se permite esta en meses específicos del año ya que en sí la pesca de atún rojo se considera prohibida a nivel recreativo

como donde y cuando practicar la pesca del atun rojo - May 02 2022

web may 17 2016 pesca del atún rojo el atún rojo también llamado cimarrón es un animal espectacular al que tenemos que respetar muy mucho a la hora de ir en su captura pues puede llegar a pesar más de 400 kg y nadar a un velocidad de 40 k h que equipo necesitamos para la pesca del atún rojo caña y carrete

pesca atún rojo estrecho de gibraltar tuna fishing xperience - Mar 12 2023

web la pesca deportiva del atún rojo al curricán en el estrecho de gibraltar es una experiencia emocionante y desafiante para los amantes de la pesca conocido por ser uno de los mejores lugares del mundo para esta actividad el estrecho ofrece aguas ricas en vida marina y una gran variedad de especies entre las cuales se destaca el codiciado

todo sobre la pesca del atún rojo en canarias mundo pesca - Apr 01 2022

web el atún rojo es un tesoro que pasa por canarias dos veces al año ida y vuelta hacia y desde África en su camino en busca de aguas cálidas la pesca de atún rojo en canarias varía ligeramente a lo largo del año la temporada alta

la pesca deportiva del atún rojo ediciones tutor - Dec 09 2022

web con estilo propio apoyado en anécdotas expone con rigor todos los temas de interés para pescadores que deseen mejorar y profundizar en su pasión por la pesca del gran atún rojo

informacion pesca deportiva del atun rojo real - Apr 13 2023

web may 25 2022 se prohíbe la pesca deportiva y recreativa de atún rojo y la realización de concursos eventos deportivos o competiciones de pesca deportiva o de recreo que tengan como fin la muerte de atún rojo la única modalidad que podrá realizarse es la pesca sin muerte

preguntas y respuestas sobre la pesca del atún rojo - Aug 17 2023

web el atún rojo es una de las especies más retadoras del mundo de la pesca su captura es un verdadero trofeo en el historial de los pescadores deportivos más experimentados ellos saben que lo más importante para capturar atún es un equipo de gran potencia que alcance grandes distancias y permita maniobras milimétricas

ministerio de agricultura pesca y alimentaciÓn - Jun 03 2022

web resolución de 20 de junio de 2022 de la dirección general de ordenación pesquera y acuicultura por la que se prohíbe temporalmente la pesca tenencia a bordo y desembarque de ejemplares de atún rojo thunnus thynnus para la modalidad de pesca deportiva y recreativa

boe a 2023 11714 resolución de 28 de abril de 2023 de la - Oct 07 2022

web may 17 2023 resolución de 28 de abril de 2023 de la secretaría general de pesca por la que se establecen las disposiciones de aplicación del plan de ordenación plurianual del atún rojo en el océano atlántico oriental y el mar mediterráneo para 2023 publicado en boe núm 117 de 17 de mayo de 2023 páginas 68608 a 68654 47 págs sección iii

pesca marítima de recreo ministerio de agricultura pesca y - Nov 08 2022

web se prohíbe la pesca deportiva y recreativa de atún rojo y la realización de concursos eventos deportivos o competiciones de pesca deportiva o de recreo que tengan como fin la muerte de atún rojo en todas estas actividades se deberá adoptar las medidas precisas para asegurar la devolución con vida al mar de todos los atunes que se capturen

campaña atún rojo 2023 ministerio de agricultura pesca y - May 14 2023

web campaña atún rojo 2023 resolución de 28 de abril de 2023 de la secretaría general de pesca por la que se establecen las disposiciones de aplicación del plan de ordenación plurianual del atún rojo en el océano atlántico oriental y el mar mediterráneo para 2023

pesca del atún con caña y sedal national geographic - Aug 05 2022

web el atún rojo más grande que se ha capturado en el atlántico norte con caña y carrete fue un ejemplar que se pescó en nueva escocia en 1979 y que pesaba 678 kilos en el estado de massachusetts eeuu el récord está en un increíble pez de 557 kilogramos que se capturó en 1984 el equipo necesario para pescar estos atunes es

descubre dónde pescar el codiciado atún rojo en españa te lo - Jan 30 2022

web gran calidad del atún rojo la pesca del atún rojo en españa se da en aguas del mediterráneo donde la temperatura y los nutrientes son propicios para el crecimiento de esta especie por lo tanto el atún rojo capturado en españa es conocido por su

alta calidad y

la pesca deportiva del atÚn rojo librería deportiva - Feb 11 2023

web el atún rojo es la especie que por su forma su fuerza sus colores sus costumbres su historia y sobre todo su pesca deportiva suscita mayor interés entre los aficionados a la pesca de altura este libro pionero en la bibliografía española sobre el atún rojo recoge los conocimientos y experiencias de su autor adquiridos a través de

pesca de atún en el delta del ebro mundo pesca - Feb 28 2022

web la pesca en el delta del ebro es una de las más destacadas de españa y muchos son los pescadores deportivos que acuden a la zona del delta para poder practicar la pesca del atún rojo un pez pelágico que ofrece excelentes combates contenidos de la página mostrar por qué destaca la pesca de atún rojo en el delta del ebro

la pesca deportiva del atÚn rojo casa del libro - Jul 16 2023

web este libro pionero en la bibliografía española sobre el atún rojo recoge los conocimientos y experiencias de su autor adquiridos a través de los años que lleva pescándolos en nuestras costas con estilo propio apoyado en anécdotas expone con rigor todos los temas de interés para pescadores principiantes y expertos que deseen