STANDARD

CAP AREA

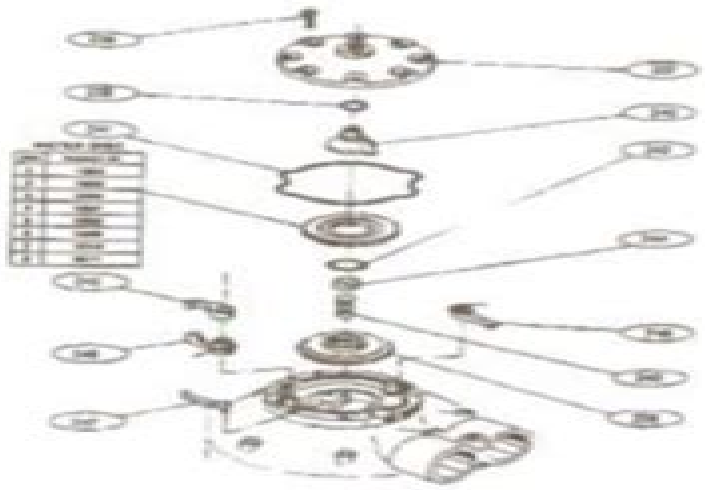

IN / OUT ADAPTERS

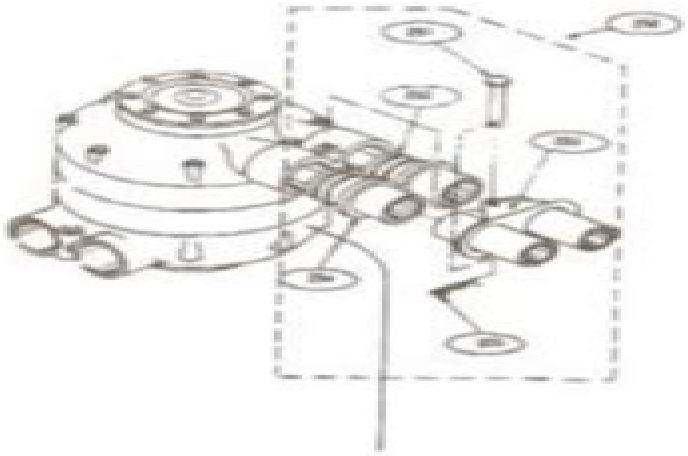

NO.	DESCRIPTION
236	Screw (Cap)
237	Cap
238	Control Disc
239	O-Ring (Actuator)
240	Actuator
241	Seat (Cap)
242	O-Ring (Balance Piston)
244	Balance Piston
245	Pawl (Motor Drive)
246	Pawl (Reg. Start)
247	Pawl (No Back)
248	Pawl (Reg. Drive)

NO.	DESCRIPTION
249	Spring (Balance Piston)
250	Kit, In/Out Adapter (Brass)
	Kit, In/Out Adapter (Plas-Glue)
	Kit, In/Out Adapter (Brass-Thread)
251	Clevis Pin
252	O-Ring (Tank Conn.-In/Out)
253	Adapter Bracket In/Out
254	Adapter In/Out (Brass)
	Adapter In/Out (Plas-Glue)
	Adapter In/Out (Brass-Thread)
255	Hardpin

Part numbers on page 113.

Kinetico Water Softener Model 50c Manual

Jin-Ying Zhang

Kinetico Water Softener Model 50c Manual:

Right here, we have countless book **Kinetico Water Softener Model 50c Manual** and collections to check out. We additionally have enough money variant types and next type of the books to browse. The okay book, fiction, history, novel, scientific research, as without difficulty as various supplementary sorts of books are readily friendly here.

As this Kinetico Water Softener Model 50c Manual, it ends occurring subconscious one of the favored book Kinetico Water Softener Model 50c Manual collections that we have. This is why you remain in the best website to see the amazing ebook to have.

https://staging.conocer.cide.edu/public/browse/fetch.php/Mbchb_2016_Medunsa_Wat_Is_Required.pdf

Table of Contents Kinetico Water Softener Model 50c Manual

1. Understanding the eBook Kinetico Water Softener Model 50c Manual
    - The Rise of Digital Reading Kinetico Water Softener Model 50c Manual
    - Advantages of eBooks Over Traditional Books
2. Identifying Kinetico Water Softener Model 50c Manual
    - Exploring Different Genres
    - Considering Fiction vs. Non-Fiction
    - Determining Your Reading Goals
3. Choosing the Right eBook Platform
    - Popular eBook Platforms
    - Features to Look for in an Kinetico Water Softener Model 50c Manual
    - User-Friendly Interface
4. Exploring eBook Recommendations from Kinetico Water Softener Model 50c Manual
    - Personalized Recommendations
    - Kinetico Water Softener Model 50c Manual User Reviews and Ratings
    - Kinetico Water Softener Model 50c Manual and Bestseller Lists
5. Accessing Kinetico Water Softener Model 50c Manual Free and Paid eBooks

- Kinetico Water Softener Model 50c Manual Public Domain eBooks
- Kinetico Water Softener Model 50c Manual eBook Subscription Services
- Kinetico Water Softener Model 50c Manual Budget-Friendly Options

6. Navigating Kinetico Water Softener Model 50c Manual eBook Formats
   - ePub, PDF, MOBI, and More
   - Kinetico Water Softener Model 50c Manual Compatibility with Devices
   - Kinetico Water Softener Model 50c Manual Enhanced eBook Features
7. Enhancing Your Reading Experience
   - Adjustable Fonts and Text Sizes of Kinetico Water Softener Model 50c Manual
   - Highlighting and Note-Taking Kinetico Water Softener Model 50c Manual
   - Interactive Elements Kinetico Water Softener Model 50c Manual
8. Staying Engaged with Kinetico Water Softener Model 50c Manual
   - Joining Online Reading Communities
   - Participating in Virtual Book Clubs
   - Following Authors and Publishers Kinetico Water Softener Model 50c Manual
9. Balancing eBooks and Physical Books Kinetico Water Softener Model 50c Manual
   - Benefits of a Digital Library
   - Creating a Diverse Reading Collection Kinetico Water Softener Model 50c Manual
10. Overcoming Reading Challenges
    - Dealing with Digital Eye Strain
    - Minimizing Distractions
    - Managing Screen Time
11. Cultivating a Reading Routine Kinetico Water Softener Model 50c Manual
    - Setting Reading Goals Kinetico Water Softener Model 50c Manual
    - Carving Out Dedicated Reading Time
12. Sourcing Reliable Information of Kinetico Water Softener Model 50c Manual
    - Fact-Checking eBook Content of Kinetico Water Softener Model 50c Manual
    - Distinguishing Credible Sources
13. Promoting Lifelong Learning
    - Utilizing eBooks for Skill Development

- Exploring Educational eBooks

14. Embracing eBook Trends
    - Integration of Multimedia Elements
    - Interactive and Gamified eBooks

Kinetico Water Softener Model 50c Manual Introduction

In todays digital age, the availability of Kinetico Water Softener Model 50c Manual books and manuals for download has revolutionized the way we access information. Gone are the days of physically flipping through pages and carrying heavy textbooks or manuals. With just a few clicks, we can now access a wealth of knowledge from the comfort of our own homes or on the go. This article will explore the advantages of Kinetico Water Softener Model 50c Manual books and manuals for download, along with some popular platforms that offer these resources. One of the significant advantages of Kinetico Water Softener Model 50c Manual books and manuals for download is the cost-saving aspect. Traditional books and manuals can be costly, especially if you need to purchase several of them for educational or professional purposes. By accessing Kinetico Water Softener Model 50c Manual versions, you eliminate the need to spend money on physical copies. This not only saves you money but also reduces the environmental impact associated with book production and transportation. Furthermore, Kinetico Water Softener Model 50c Manual books and manuals for download are incredibly convenient. With just a computer or smartphone and an internet connection, you can access a vast library of resources on any subject imaginable. Whether youre a student looking for textbooks, a professional seeking industry-specific manuals, or someone interested in self-improvement, these digital resources provide an efficient and accessible means of acquiring knowledge. Moreover, PDF books and manuals offer a range of benefits compared to other digital formats. PDF files are designed to retain their formatting regardless of the device used to open them. This ensures that the content appears exactly as intended by the author, with no loss of formatting or missing graphics. Additionally, PDF files can be easily annotated, bookmarked, and searched for specific terms, making them highly practical for studying or referencing. When it comes to accessing Kinetico Water Softener Model 50c Manual books and manuals, several platforms offer an extensive collection of resources. One such platform is Project Gutenberg, a nonprofit organization that provides over 60,000 free eBooks. These books are primarily in the public domain, meaning they can be freely distributed and downloaded. Project Gutenberg offers a wide range of classic literature, making it an excellent resource for literature enthusiasts. Another popular platform for Kinetico Water Softener Model 50c Manual books and manuals is Open Library. Open Library is an initiative of the Internet Archive, a non-profit organization dedicated to digitizing cultural artifacts and making them accessible to the public. Open Library hosts millions of books, including both public domain works and contemporary titles. It also allows users to borrow digital copies of certain

books for a limited period, similar to a library lending system. Additionally, many universities and educational institutions have their own digital libraries that provide free access to PDF books and manuals. These libraries often offer academic texts, research papers, and technical manuals, making them invaluable resources for students and researchers. Some notable examples include MIT OpenCourseWare, which offers free access to course materials from the Massachusetts Institute of Technology, and the Digital Public Library of America, which provides a vast collection of digitized books and historical documents. In conclusion, Kinetico Water Softener Model 50c Manual books and manuals for download have transformed the way we access information. They provide a cost-effective and convenient means of acquiring knowledge, offering the ability to access a vast library of resources at our fingertips. With platforms like Project Gutenberg, Open Library, and various digital libraries offered by educational institutions, we have access to an ever-expanding collection of books and manuals. Whether for educational, professional, or personal purposes, these digital resources serve as valuable tools for continuous learning and self-improvement. So why not take advantage of the vast world of Kinetico Water Softener Model 50c Manual books and manuals for download and embark on your journey of knowledge?

FAQs About Kinetico Water Softener Model 50c Manual Books

1. Where can I buy Kinetico Water Softener Model 50c Manual books? Bookstores: Physical bookstores like Barnes & Noble, Waterstones, and independent local stores. Online Retailers: Amazon, Book Depository, and various online bookstores offer a wide range of books in physical and digital formats.
2. What are the different book formats available? Hardcover: Sturdy and durable, usually more expensive. Paperback: Cheaper, lighter, and more portable than hardcovers. E-books: Digital books available for e-readers like Kindle or software like Apple Books, Kindle, and Google Play Books.
3. How do I choose a Kinetico Water Softener Model 50c Manual book to read? Genres: Consider the genre you enjoy (fiction, non-fiction, mystery, sci-fi, etc.). Recommendations: Ask friends, join book clubs, or explore online reviews and recommendations. Author: If you like a particular author, you might enjoy more of their work.
4. How do I take care of Kinetico Water Softener Model 50c Manual books? Storage: Keep them away from direct sunlight and in a dry environment. Handling: Avoid folding pages, use bookmarks, and handle them with clean hands. Cleaning: Gently dust the covers and pages occasionally.
5. Can I borrow books without buying them? Public Libraries: Local libraries offer a wide range of books for borrowing. Book Swaps: Community book exchanges or online platforms where people exchange books.

6. How can I track my reading progress or manage my book collection? Book Tracking Apps: Goodreads, LibraryThing, and Book Catalogue are popular apps for tracking your reading progress and managing book collections. Spreadsheets: You can create your own spreadsheet to track books read, ratings, and other details.
7. What are Kinetico Water Softener Model 50c Manual audiobooks, and where can I find them? Audiobooks: Audio recordings of books, perfect for listening while commuting or multitasking. Platforms: Audible, LibriVox, and Google Play Books offer a wide selection of audiobooks.
8. How do I support authors or the book industry? Buy Books: Purchase books from authors or independent bookstores. Reviews: Leave reviews on platforms like Goodreads or Amazon. Promotion: Share your favorite books on social media or recommend them to friends.
9. Are there book clubs or reading communities I can join? Local Clubs: Check for local book clubs in libraries or community centers. Online Communities: Platforms like Goodreads have virtual book clubs and discussion groups.
10. Can I read Kinetico Water Softener Model 50c Manual books for free? Public Domain Books: Many classic books are available for free as theyre in the public domain. Free E-books: Some websites offer free e-books legally, like Project Gutenberg or Open Library.

Find Kinetico Water Softener Model 50c Manual :

~~mbchb 2016 medunsa wat is required~~
mazda tribute manual gearbox problems
mazda miata 03 engine diagram
mazda tribute 2005 audio system wiring
mazda freda for sale nz auckland
mazda mx 5 service manual 2003
mba operations management question paper
mbbs entrance exam question papers jipmer
mazda protege 2002 2003 service repair manual
mazda mx5 miata full service repair manual 2000 2004
mazda miata parts user manual diagram
mazda protege 19962006 factory service repair manual
mazda throttle relearn

mazda b2500 user manual
mc echer beaded bracelet

Kinetico Water Softener Model 50c Manual :

Manual de Calidad Volumen 1 Procesos de Manufactura ... MANUAL. DE CALIDAD. PROCESOS DE MANUFACTURA. Revisado: 1 Enero 1, 2004. TÓPICO: PÁGINA: i. TABLA DE CONTENIDO PEPSICO BEVERAGES “Manual de calidad ” PRESENTADO POR: JUÁREZ ... Manual de calidad, Pepsi Co. Materia: Fundamentos De Telecomunicaciones. 14 ... PepsiCo cuenta con aseguramiento de la calidad en las siguientes áreas ... Agricultura Positiva PepsiCo Manual para el proveedor May 18, 2022 — Mejora en los indicadores de cantidad y calidad de cuencas hidrográficas, utilizando herramientas como: • Cool Farm Tool Water · • Fieldprint ... THE PEPSICO WAY ¿POR QUÉ TENEMOS UN. CÓDIGO DE CONDUCTA? El Código de Conducta Global de PepsiCo proporciona un mapa de ruta de las políticas, los estándares y los ... “Manual de calidad ” PRESENTADO POR: JUÁREZ ... DIAGNOSTICO DE CALIDAD. PepsiCo cuenta con aseguramiento de la calidad en las siguientes áreas: PRODUCCIÓN: Alistamiento de materia prima Personal ... CALIDAD - Pepsi COMPANY - WordPress.com Dec 19, 2016 — El Manual de Calidad de PCI está formado por cuatro volúmenes. El manual hasido diseñado para proporcionar una guía y para que sirva como ... (PDF) 26998330 Manual de Calidad Volumen 1 Procesos de ... MANUAL DE CALIDAD PROCESOS DE MANUFACTURA 1 Revisado: Enero 1, 2004 iTÓPICO: TABLA DE CONTENIDO PÁGINA: PEPSICO BEVERAGES INTERNATIONAL MANUAL: PROCESOS DE ... THE PEPSICO WAY CONOCER LAS NORMAS, LAS. POLÍTICAS Y LOS PROCEDIMIENTOS. DE SEGURIDAD ALIMENTARIA. Y CALIDAD DEL PRODUCTO. APLICABLES A LOS PRODUCTOS. FABRICADOS EN TU ... Manual De Calidad De Pepsi Gratis Ensayos Manual De Calidad De Pepsi ensayos y trabajos de investigación. calidad pepsi. DE PRODUCCIÓN DE PEPSI COLA DE VENEZUELA, C.A. – PLANTA CAUCAGUA INTRODUCCIÓN ... Test Prep Resources Crosswalk Coach Ela And Math With easy access to our collection, you can rapidly check out and find the. PDF Test Prep Resources Crosswalk Coach Ela And Math that rate of interest you ... Coach | EPS Comprehensive, standards-based resources to address learning gaps and improve student achievement in content-area learning. Learn More · Coach practice texts ... New York Crosswalk Coach Plus Revised Edition English ... Addresses all tested CCLS and is aligned to the Engage NY ELA Curriculum · Provides more multiple-choice and open-ended practice in each reading lesson · Features ... New York Crosswalk Coach Plus Math Grade 8 Revised ... New York Crosswalk Coach PLUS, Revised Edition provides an easy yet thorough approach to reviewing and practicing the skills covered in the CCLS. Practice Coach Plus, Gold Edition, ELA, Grade 7 Practice Coach PLUS, Gold Edition progresses students from lower to higher rigor with scaffolding and guided practice. Organized by skills, teachers can easily ... Georgia Instructional Materials Center Test Preparation ... Each lesson targets a single skill, promoting achievement through instruction and practice. Crosswalk

Coach Plus ELA Practice Tests. The Performance Coach ... New York Crosswalk Coach Plus English Language Arts ... Following the proven Coach format, this comprehensive resource provides scaffolded lesson practice for students to prepare them for the rigor of the state ... New York Crosswalk Coach Plus Revised Edition ... Addresses all tested CCLS and is aligned to the EngageNY ELA Curriculum · Provides more multiple-choice and open-ended practice in each reading lesson · Features ... Coach Book Answers.pdf Common names do not do this. Lesson Review. 1. C. 2. C. 3. A. 4. A. Lesson 16: Conservation of Matter. Discussion Question. In any equation, the products. Crosswalk Coach for the Common Core Standards, Ela, G7 ... New York Crosswalk Coach clearly identifies how the standards are embedded in the new Common Core. This robust resource provides an easy approach to teaching ... Instructor's Resource Manual to Accompany Information ... Instructor's Resource Manual to Accompany Information Technology for the Health Professions, 3rd Edition [LIllian Burke, Barbara Weill] on Amazon.com. Information Technology for the Health Profesessions ... Information Technology for the Health Profesessions-Instructor's Resource Manual with Test Bank and Power Point Lecture CD-ROM ; Publisher. Pearson Prentice Hall. Health Information Technology (Instructor's Resource Manual) Health Information Technology (Instructor's Resource Manual) - Softcover ; Featured Edition. ISBN 10: ISBN 13: 9781416023166. Publisher: Saunders, 2007 Component 6: Health Management Information Systems ... ... Instructors This Instructor Manual is a resource for instructors using this component. ... Resource Center for Health Information Technology under Contract No. Online Store - My ACHE Price: ; ISBN:9781640551916 ; Number of pages:465 ; Edition: 9 ; Year published:2021 ; Print date:2020-08-01T00:00:00. Health Information Management & Technology Library Guide Aug 31, 2023 — Health information technology (health IT) makes it possible for health care providers to better manage patient care through secure use and ... Health Information Technology and Management - TCC OER ... A free course from Carnegie Mellon University that offers an overview of healthcare, health information technology, and health information management systems. Faculty Resource Manual Shall provide information to the General Faculty regarding activities of the Faculty Senate. ... Director of Information Technology. Of the four (4) faculty, one ... Health Information Technology | Health Sciences The Health Information Technology Associate in Science (A.S.) degree at Valencia College is a two-year program with online courses that prepares you to go ...