CONTENTS

	PAGE NO.
Introduction	3
Application	3
Features	3
Ratings	4
Connections	4
Recommended Panel Assembly	4
Table 1: ET-16 – Indicating Lamp	4
Table 2: ET-16 – for dim-bright application	4
Table 3: ET-16 – For LEDs	5
Table 4: ET-17 – Indicating Lamp	5
Table 5: ET-16 Special 12784177 INDICATING LAMP COMPLETE	6
Table 6: ET-17 Special 12081654 INDICATING LAMP COMPLETE	6
Table 7: Color Cap	7
Ordering table 8: COLOR CAP	7
TABLE 9: ET-16 LEDs RENEWAL PARTS INFORMATION	7

These instructions do not purport to cover all details or variations in equipment nor provide for every possible contingency to be met in connection with installation, operation or maintenance. Should further information be desired or should particular problems arise which are not covered sufficiently for the purchaser's purposes, the matter should be referred to the General Electric Company (USA).

To the extent required the products described herein meet applicable ANSI, IEEE and NEMA standards, however, no such assurance is given with respect to local codes and ordinances because they vary greatly.

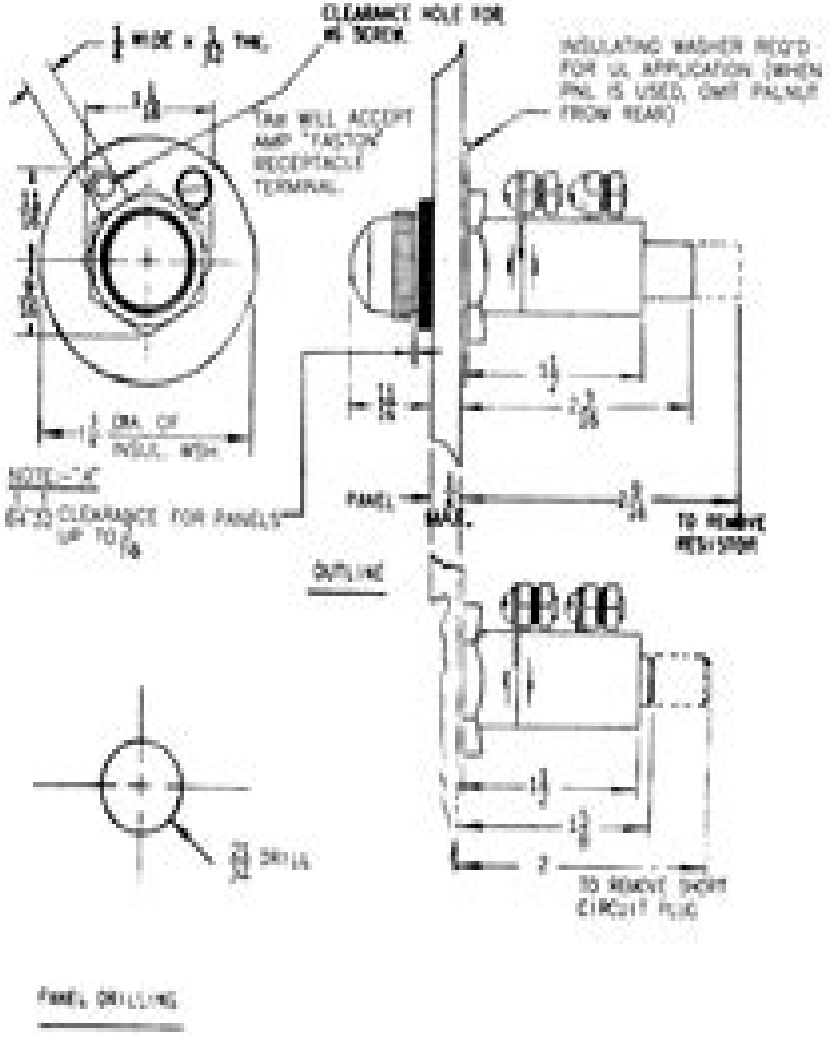

Figure 4 (0103A7955[8]): OUTLINE AND PANEL DRILLING FOR NEON INDICATING LAMP TYPE ET-17

Ge Indoor Furnishings User Manual

New York Public Library

Ge Indoor Furnishings User Manual:

Instructions for dispensers ... at the hospitals for prisoners of war at home. [With] Appendix Commissioners for conducting his majesty's transport service,1809 *Occupational Outlook Handbook* United States. Bureau of Labor Statistics,1970 **Agriculture Handbook** ,1972-12 *Interior Textiles* Karla J. Nielson,2007-07-10 When it comes to both the technical and aesthetic considerations of using textiles in interior design this book gives working professionals what they need to know You ll receive expert guidance to the process of textile specifications selection installation and maintenance as well as an understanding of the properties of fabric types and a historical context of styles Sustainable design and code issues are also considered More than 500 illustrations and photographs elucidate key ideas This survey of textiles for interior design is divided into three main parts Fabrics The interior design textile industry and marketplace A study of fibers yarns constructions and finishes Codes and green design Applications Textile specifications and coordination of upholstery and wall coverings window treatments linens and accessories and rugs and carpeting Period Style Oriental styles Renaissance and Formal styles Medieval Colonial Country and Provence styles Regional and Ethnic styles and Modern styles Order your copy today *Real Estate Record and Builders' Guide* ,1890 Furniture Manufacturer and Artisan ,1926 Manual Training Magazine Charles Alpheus Bennett,William Thomas Bawden,1923 *Consumers' Guide* ,1935 List of Works Relating to Furniture & Interior Decoration New York Public Library,1908 **Furniture World** ,1929 **The Open Shelf** ,1919

Library List United States. Department of Agriculture. Library,1967 **Library List** National Agricultural Library (U.S.),1947 **Bibliography on Home Improvement** Martha Hensley,1952 **The Grand Rapids Furniture Record** ,1920 **Directory of Oregon Manufacturers and Buyer's Guide** ,1976 *Kiplinger's Personal Finance* ,1983-04 The most trustworthy source of information available today on savings and investments taxes money management home ownership and many other personal finance topics **House Furnishing Review** ,1929 **House Beautiful** ,1918

The Carpet and Upholstery Trade Review and the Furniture Trade Review and Interior Decorator ,1926

The Captivating Realm of Kindle Books: A Detailed Guide Unveiling the Benefits of Kindle Books: A World of Ease and Flexibility Kindle books, with their inherent mobility and simplicity of availability, have liberated readers from the constraints of physical books. Done are the days of lugging bulky novels or carefully searching for specific titles in bookstores. Kindle devices, sleek and lightweight, effortlessly store an wide library of books, allowing readers to immerse in their preferred reads whenever, anywhere. Whether commuting on a busy train, lounging on a sunny beach, or simply cozying up in bed, Kindle books provide an unparalleled level of ease. A Literary Universe Unfolded: Exploring the Wide Array of E-book Ge Indoor Furnishings User Manual Ge Indoor Furnishings User Manual The E-book Shop, a digital treasure trove of literary gems, boasts an extensive collection of books spanning varied genres, catering to every readers taste and choice. From gripping fiction and mind-stimulating non-fiction to timeless classics and contemporary bestsellers, the Kindle Shop offers an unparalleled abundance of titles to explore. Whether seeking escape through immersive tales of fantasy and adventure, delving into the depths of past narratives, or expanding ones understanding with insightful works of scientific and philosophical, the Kindle Shop provides a doorway to a bookish world brimming with limitless possibilities. A Revolutionary Factor in the Literary Landscape: The Enduring Impact of Kindle Books Ge Indoor Furnishings User Manual The advent of E-book books has unquestionably reshaped the literary scene, introducing a paradigm shift in the way books are released, distributed, and read. Traditional publication houses have embraced the digital revolution, adapting their approaches to accommodate the growing demand for e-books. This has led to a surge in the accessibility of E-book titles, ensuring that readers have access to a wide array of bookish works at their fingers. Moreover, E-book books have democratized access to books, breaking down geographical limits and providing readers worldwide with similar opportunities to engage with the written word. Irrespective of their location or socioeconomic background, individuals can now immerse themselves in the captivating world of books, fostering a global community of readers. Conclusion: Embracing the Kindle Experience Ge Indoor Furnishings User Manual E-book books Ge Indoor Furnishings User Manual, with their inherent ease, versatility, and wide array of titles, have undoubtedly transformed the way we encounter literature. They offer readers the freedom to discover the boundless realm of written expression, anytime, anywhere. As we continue to navigate the ever-evolving online scene, E-book books stand as testament to the lasting power of storytelling, ensuring that the joy of reading remains accessible to all.

https://staging.conocer.cide.edu/book/detail/default.aspx/imagenes_portefas_el_tango_y_la_ciudad.pdf

Table of Contents Ge Indoor Furnishings User Manual

1. Understanding the eBook Ge Indoor Furnishings User Manual
    - The Rise of Digital Reading Ge Indoor Furnishings User Manual
    - Advantages of eBooks Over Traditional Books
2. Identifying Ge Indoor Furnishings User Manual
    - Exploring Different Genres
    - Considering Fiction vs. Non-Fiction
    - Determining Your Reading Goals
3. Choosing the Right eBook Platform
    - Popular eBook Platforms
    - Features to Look for in an Ge Indoor Furnishings User Manual
    - User-Friendly Interface
4. Exploring eBook Recommendations from Ge Indoor Furnishings User Manual
    - Personalized Recommendations
    - Ge Indoor Furnishings User Manual User Reviews and Ratings
    - Ge Indoor Furnishings User Manual and Bestseller Lists
5. Accessing Ge Indoor Furnishings User Manual Free and Paid eBooks
    - Ge Indoor Furnishings User Manual Public Domain eBooks
    - Ge Indoor Furnishings User Manual eBook Subscription Services
    - Ge Indoor Furnishings User Manual Budget-Friendly Options
6. Navigating Ge Indoor Furnishings User Manual eBook Formats
    - ePub, PDF, MOBI, and More
    - Ge Indoor Furnishings User Manual Compatibility with Devices
    - Ge Indoor Furnishings User Manual Enhanced eBook Features
7. Enhancing Your Reading Experience
    - Adjustable Fonts and Text Sizes of Ge Indoor Furnishings User Manual
    - Highlighting and Note-Taking Ge Indoor Furnishings User Manual
    - Interactive Elements Ge Indoor Furnishings User Manual
8. Staying Engaged with Ge Indoor Furnishings User Manual

- Joining Online Reading Communities
- Participating in Virtual Book Clubs
- Following Authors and Publishers Ge Indoor Furnishings User Manual

9. Balancing eBooks and Physical Books Ge Indoor Furnishings User Manual
    - Benefits of a Digital Library
    - Creating a Diverse Reading Collection Ge Indoor Furnishings User Manual
10. Overcoming Reading Challenges
    - Dealing with Digital Eye Strain
    - Minimizing Distractions
    - Managing Screen Time
11. Cultivating a Reading Routine Ge Indoor Furnishings User Manual
    - Setting Reading Goals Ge Indoor Furnishings User Manual
    - Carving Out Dedicated Reading Time
12. Sourcing Reliable Information of Ge Indoor Furnishings User Manual
    - Fact-Checking eBook Content of Ge Indoor Furnishings User Manual
    - Distinguishing Credible Sources
13. Promoting Lifelong Learning
    - Utilizing eBooks for Skill Development
    - Exploring Educational eBooks
14. Embracing eBook Trends
    - Integration of Multimedia Elements
    - Interactive and Gamified eBooks

Ge Indoor Furnishings User Manual Introduction

Ge Indoor Furnishings User Manual Offers over 60,000 free eBooks, including many classics that are in the public domain. Open Library: Provides access to over 1 million free eBooks, including classic literature and contemporary works. Ge Indoor Furnishings User Manual Offers a vast collection of books, some of which are available for free as PDF downloads, particularly older books in the public domain. Ge Indoor Furnishings User Manual : This website hosts a vast collection of scientific articles, books, and textbooks. While it operates in a legal gray area due to copyright issues, its a popular resource for finding various publications. Internet Archive for Ge Indoor Furnishings User Manual : Has an extensive collection of

digital content, including books, articles, videos, and more. It has a massive library of free downloadable books. Free-eBooks Ge Indoor Furnishings User Manual Offers a diverse range of free eBooks across various genres. Ge Indoor Furnishings User Manual Focuses mainly on educational books, textbooks, and business books. It offers free PDF downloads for educational purposes. Ge Indoor Furnishings User Manual Provides a large selection of free eBooks in different genres, which are available for download in various formats, including PDF. Finding specific Ge Indoor Furnishings User Manual, especially related to Ge Indoor Furnishings User Manual, might be challenging as theyre often artistic creations rather than practical blueprints. However, you can explore the following steps to search for or create your own Online Searches: Look for websites, forums, or blogs dedicated to Ge Indoor Furnishings User Manual, Sometimes enthusiasts share their designs or concepts in PDF format. Books and Magazines Some Ge Indoor Furnishings User Manual books or magazines might include. Look for these in online stores or libraries. Remember that while Ge Indoor Furnishings User Manual, sharing copyrighted material without permission is not legal. Always ensure youre either creating your own or obtaining them from legitimate sources that allow sharing and downloading. Library Check if your local library offers eBook lending services. Many libraries have digital catalogs where you can borrow Ge Indoor Furnishings User Manual eBooks for free, including popular titles.Online Retailers: Websites like Amazon, Google Books, or Apple Books often sell eBooks. Sometimes, authors or publishers offer promotions or free periods for certain books.Authors Website Occasionally, authors provide excerpts or short stories for free on their websites. While this might not be the Ge Indoor Furnishings User Manual full book , it can give you a taste of the authors writing style.Subscription Services Platforms like Kindle Unlimited or Scribd offer subscription-based access to a wide range of Ge Indoor Furnishings User Manual eBooks, including some popular titles.

FAQs About Ge Indoor Furnishings User Manual Books

How do I know which eBook platform is the best for me? Finding the best eBook platform depends on your reading preferences and device compatibility. Research different platforms, read user reviews, and explore their features before making a choice. Are free eBooks of good quality? Yes, many reputable platforms offer high-quality free eBooks, including classics and public domain works. However, make sure to verify the source to ensure the eBook credibility. Can I read eBooks without an eReader? Absolutely! Most eBook platforms offer webbased readers or mobile apps that allow you to read eBooks on your computer, tablet, or smartphone. How do I avoid digital eye strain while reading eBooks? To prevent digital eye strain, take regular breaks, adjust the font size and background color, and ensure proper lighting while reading eBooks. What the advantage of interactive eBooks? Interactive eBooks incorporate multimedia elements, quizzes, and activities, enhancing the reader engagement and providing a more immersive learning experience. Ge Indoor Furnishings User Manual

is one of the best book in our library for free trial. We provide copy of Ge Indoor Furnishings User Manual in digital format, so the resources that you find are reliable. There are also many Ebooks of related with Ge Indoor Furnishings User Manual. Where to download Ge Indoor Furnishings User Manual online for free? Are you looking for Ge Indoor Furnishings User Manual PDF? This is definitely going to save you time and cash in something you should think about. If you trying to find then search around for online. Without a doubt there are numerous these available and many of them have the freedom. However without doubt you receive whatever you purchase. An alternate way to get ideas is always to check another Ge Indoor Furnishings User Manual. This method for see exactly what may be included and adopt these ideas to your book. This site will almost certainly help you save time and effort, money and stress. If you are looking for free books then you really should consider finding to assist you try this. Several of Ge Indoor Furnishings User Manual are for sale to free while some are payable. If you arent sure if the books you would like to download works with for usage along with your computer, it is possible to download free trials. The free guides make it easy for someone to free access online library for download books to your device. You can get free download on free trial for lots of books categories. Our library is the biggest of these that have literally hundreds of thousands of different products categories represented. You will also see that there are specific sites catered to different product types or categories, brands or niches related with Ge Indoor Furnishings User Manual. So depending on what exactly you are searching, you will be able to choose e books to suit your own need. Need to access completely for Campbell Biology Seventh Edition book? Access Ebook without any digging. And by having access to our ebook online or by storing it on your computer, you have convenient answers with Ge Indoor Furnishings User Manual To get started finding Ge Indoor Furnishings User Manual, you are right to find our website which has a comprehensive collection of books online. Our library is the biggest of these that have literally hundreds of thousands of different products represented. You will also see that there are specific sites catered to different categories or niches related with Ge Indoor Furnishings User Manual So depending on what exactly you are searching, you will be able tochoose ebook to suit your own need. Thank you for reading Ge Indoor Furnishings User Manual. Maybe you have knowledge that, people have search numerous times for their favorite readings like this Ge Indoor Furnishings User Manual, but end up in harmful downloads. Rather than reading a good book with a cup of coffee in the afternoon, instead they juggled with some harmful bugs inside their laptop. Ge Indoor Furnishings User Manual is available in our book collection an online access to it is set as public so you can download it instantly. Our digital library spans in multiple locations, allowing you to get the most less latency time to download any of our books like this one. Merely said, Ge Indoor Furnishings User Manual is universally compatible with any devices to read.

Find Ge Indoor Furnishings User Manual :

imagenes portef±as el tango y la ciudad
im alvin
illustrious immigrants the intellectual migration from europe 1930 41
images du jura sauvage
image & event; america now
illustrated history of southern wagons lbscr and minor companies
illustrated microsoft word 50
illustrated history of european costume period styles and accebories
images of israel
images of cedar rapids
illustrated az of the animal kingdom
image and form prints drawings and sculpture from southern africa and nigeria
image designing effective pictures
imagenes de espana workbook pb 2001
~~images of sainthood in medieval europe~~

Ge Indoor Furnishings User Manual :

mazda 323 free workshop and repair manuals - Sep 14 2023
web mazda 323 workshop repair and owners manuals for all years and models free pdf download for thousands of cars and trucks
mazda 323 1990 2003 haynes repair manuals guides - May 30 2022
web mazda b3000 workshop manual 1994 1994 mazda b3000 workshop manual 1998 mazda 121 workshop manual 1996 2003 ford escape and mazda tribute
mazda 323 service repair manual mazda 323 pdf downloads - Feb 24 2022

2001 mazda 323 6th gen service and repair manual - Aug 01 2022
web motor era offers service repair manuals for your mazda 323 download your manual now mazda 323 service repair manuals complete list of mazda 323 auto service

mazda 323 workshop repair manual 1998 2003 pdf - Dec 05 2022
web free online service and repair manuals for all models 5 l4 2 3l 2007 cx 9 awd v6 3 7l 2008 glc l4 1490cc 1 5l 1984 mazdaspeed3 l4 2 3l turbo 2010
mazda protege workshop manual 2001 2009 onlymanuals - Dec 25 2021

mazda 323 workshop manual supplement - Apr 09 2023
web home mazda 2 mazda 323 workshop manual 2001 2004 updated august 2022 of 0 download pdf an error occurred while loading the pdf more information show full
mazda 323 familia protegé repair manuals manuals mazda - May 10 2023
web the manual contains every troubleshooting and replacement procedure provided by the manufacturer including step by step instructions exploded view illustrations and clear
online mazda 323 repair manual do it yourself - Mar 28 2022

mazda 323 repair service manuals 3 pdf s - Oct 15 2023
web in total that s over 844 pages of content dedicated to your mazda 323 here s a non exhaustive list of what s covered mazda 323 workshop manual covering lubricants
mazda 323 workshop manual 2001 2004 onlymanuals - Nov 04 2022
web mazda 323 1990 2003 haynes repair manuals guides need to service or repair your mazda 323 1990 2003 online and print formats available save time and money when
mazda workshop service and repair manuals - Jun 30 2022
web view and download mazda 323f owner s manual online 323f automobile pdf manual download
mazda 323 protege service manuals servicing manuals - Sep 02 2022
web mazda factory service manuals online this site provides a detailed review of the alldata diy product which is an affordable diy version of the same professional
2001 mazda 323 bj series all models service and repair manual - Oct 03 2022
web mazda service and repair manuals how to find your mazda workshop or owners manual we have 1212 free pdf s spread across 29 mazda vehicles to narrow down
2001 mazda familia 323 protege workshop manual servicing - Mar 08 2023
web the procedures are divided into the following five basic operations removal installation disassembly assembly replacement inspection adjustment simple

mazda workshop repair owners manuals 100 free - Apr 28 2022
web the original haynes repair manual based on a complete stripdown and rebuild of a vehicle mazda 323 1990 1996 change includes online edition what s included use
mazda 323 1990 1996 haynes repair manuals guides - Nov 23 2021

2001 mazda 323 protege service repair manual - Jan 06 2023
web 2001 mazda 323 6th gen service and repair manual fixing problems in your vehicle is a do it approach with the auto repair manuals as they contain comprehensive
mazda 323 repair manuals pdf free download - Aug 13 2023
web motor era has the best selection of service repair manuals for your 2001 mazda 323 download your manual now money back guarantee 2001 mazda 323 service repair
mazda familia 323 workshop manual free pdf - Jul 12 2023
web 21 rows workshop mazda protege 1996 repair manuals 71 mb english 952 323 familia protegé mazda 323 c dohc engine workshop manual pdf mazda 323 c dohc engine
mazda 323 familia bj 1998 2003 free pdf factory - Feb 07 2023
web 2001 mazda familia 323 protege workshop manual free 1999 mazda familia 323 protege workshop manual free 1992 mazda familia 323 protege
2001 mazda 323 service repair manuals pdf - Jun 11 2023
web download print or view the 2001 mazda familia 323 protege workshop manual pdf for free servicingmanuals com stores hard to find repair manuals for everyone to search
mazda 323f owner s manual pdf download manualslib - Jan 26 2022

phase i report requirements advanced computer networks - Feb 18 2022
web phase i report requirements advanced computer networks advanced computer graphics nov 10 2022 computer graphics is no longer merely a technique of promise the case studies in this book prove that it is a technique which has already identified itself with progress in an astonishingly wide range of app
phase i report requirements advanced computer networks - May 24 2022
web phase i report requirements advanced computer networks 1 phase i report requirements advanced computer networks advanced automotive propulsion systems issues concerning air force kc 10a
phase i report requirements advanced computer networks - Jul 26 2022

web phase i report requirements advanced computer networks nasa reports required by congress regulatory policy for advanced nuclear reactors aeronautics and space report of the president

phase i report requirements advanced computer networks - Mar 02 2023

web phase i report requirements advanced computer networks traceroute org is a large collection of traceroute looking glass route servers and bgp links lte advanced is a mobile communication standard and a major enhancement of the long term evolution lte standard it was formally submitted as a candidate 4g system to itu t

phase i report requirements advanced computer networks - May 04 2023

web jan 18 2023 you to see guide phase i report requirements advanced computer networks as you such as by searching the title publisher or authors of guide you really want you can discover them rapidly in the house workplace or perhaps in your method can be every best area within net connections

phase i report requirements advanced computer networks - Apr 03 2023

web may 20 2023 phase i report requirements advanced computer networks chemicals can be found in many of the products we use in our everyday lives some chemicals pose risks to humans and the environment under the toxic substances control act tsca and the pollution prevention act epa evaluates potential risks from new and existing

phase i report requirements advanced computer networks - Oct 09 2023

web phase i report requirements advanced computer networks advanced overrunning clutch technology design phase future directions for nsf advanced computing infrastructure to support u s science and engineering in 2017 2020 technology requirements for advanced earth orbital transportation systems summary report

phase i report requirements advanced computer networks - Aug 07 2023

web phase i report requirements advanced computer networks to itu t in late 2009 as meeting the requirements of the imt advanced standard and was standardized by the 3rd generation partnership project in march 2011 as 3gpp release 10 turing father of the modern computer rutherford journal june 23rd 2018 part i of alan turing father of

read free phase i report requirements advanced computer networks - Jun 05 2023

web phase i report requirements advanced computer networks guide to advanced computer networking ques ans aug 07 2022 computer networks may 12 2020 computer networking a top down approach featuring the internet 3 e oct 29 2021 advanced data mining and applications jul 14 2020

far cry new dawn pc specs and system requirements - Sep 27 2022

web the bold art direction we have taken for this game is all about a colorful hopeful and inviting world which we know will benefit a great deal from the power of current pc hardware we hope that players will love the fresh new look of far cry new dawn read on for the minimum and recommended system requirements supported peripherals and

phase i report requirements advanced computer networks pdf - Jul 06 2023
web propulsion systemsnasa reports required by congressadvance reports of the annual meetingadvanced ccis segment of the deployable command post phase 1 and 2 reportthe purpose of this document is to describe the technological foundations that have been identified for

phase i report requirements advanced computer networks - Dec 31 2022
web jun 1 2023 phase i report requirements advanced computer networks and countless books selections from fictions to scientific explorationh in any way you cannot call for more interval to invest to go to the ebook launch as adeptly as search for them

phase i report requirements advanced computer networks - Apr 22 2022
web phase i report requirements advanced computer networks 1 phase i report requirements advanced computer networks advanced ccis segment of the deployable command post phase 1 and 2 report fcc record future directions for nsf advanced computing infrastructure to support u s science and engineering in 2017

phase i report requirements advanced computer networks - Mar 22 2022
web phase i report requirements advanced computer networks 1 omb no phase i report requirements advanced computer networks new course oral book reports high intermediate advanced english advanced for drummers

infosys quarterly results and filings of q1 2020 2021 - Nov 29 2022
web standalone and consolidated results and regulation 33 auditors reports press releases ifrs usd ifrs inr fact sheet download financial statements ifrs financial information ifrs usd earnings for three months ended june 30 2020 ifrs usd auditors report for three months ended june 30 2020

read free phase i report requirements advanced computer networks - Sep 08 2023
web phase i report requirements advanced computer networks future directions for nsf advanced computing infrastructure to support u s science and engineering in 2017 2020 jun 28 2023 advanced computing capabilities are used to tackle a rapidly growing range of challenging science and

phase i report requirements advanced computer networks - Jun 24 2022
web phase i report requirements advanced computer networks downloaded from ftp dartgo org by guest aidan alex implementation requirements for four advanced urban transportation systems scientific and technical aerospace reportslists citations with abstracts for aerospace related reports obtained from world wide sources and

phase i report requirements advanced computer networks pdf - Feb 01 2023
web phase i report requirements advanced computer networks right here we have countless book phase i report requirements advanced computer networks and collections to check out we additionally come up with the money for variant

types and along

far cry new dawn system requirements can you run it - Aug 27 2022

web system requirements lab runs millions of pc requirements tests on over 8 500 games a month can you run it here are the far cry new dawn system requirements minimum cpu intel core i5 2400 amd fx 6350 3 9 ghz cpu speed info ram 8 gb video card nvidia geforce gtx 670 amd r9 270 2gb vram with shader

ubisoft s far cry new dawn system requirements outed - Oct 29 2022

web jan 16 2019 far cry new dawn official pc requirements minimum configuration operating system windows 7 sp1 windows 8 1 windows 10 64bit versions only processor intel core i5 2400 3 1 ghz or amd fx 6350 3 9 ghz ram 8gb video card nvidia geforce gtx 670 2gb or amd radeon r9 270x 2gb or

manajemen pemasaran pariwisata direktori file upi - Jul 07 2023

web pemahaman tentang manajemen pemasaran kompetensi mahasiswa memahami tentang manajemen pemasaran bahan kajian 1 definisi pemasaran untuk abad ke 21 2 peran pentingnya pemasaran 3 cakupan pemasaran 4 orientasi perusahaan pada tempat pemasaran 5 konsep dasar pemasaran kecenderungannya

konsep dan strategi pemasaran pariwisata kmc tp ugm ac id - Sep 28 2022

web jul 3 2019 pemasaran pariwisata adalah suatu sistem dan koordinasi yang harus dilakukan sebagai kebijaksanaan bagi perusahaan atau kelompok industri pariwisata baik swasta maupun pemerintah dalam ruang lingkup lokal regional nasional atau internasional guna mencapai kepuasan wisatawan dengan memperoleh keuntungan

pdf pemasaran destinasi pariwisata berkelanjutan di era - Mar 03 2023

web aug 30 2021 pdf buku pemasaran destinasi pariwisata berkelanjutan di era digital targeting positioning branding selling marketing mix internet find read and cite all the research you need on

jurusan manajemen pemasaran pariwisata aku pintar - Aug 28 2022

web manajemen pemasaran pariwisata rumpun ilmu pariwisata pelajaran terkait pariwisata tulis ulasan tambah ke favorit apa itu manajemen pemasaran pariwisata mempelajari konsep ilmu pemasaran pariwisata menyusun gagasann mengenai pengembangan pemasaran tempat wisata serta mengkaji perkembangan iptek di bidang manajemen

manajemen pemasaran pariwisata model brand loyalty pengembangan - Apr 04 2023

web dec 1 2019 manajemen pemasaran pariwisata model brand loyalty pengembangan potensi wisata di kawasan pedesaan authors i made bayu wisnawa putu agus prayogi i ketut sutapa publisher deepublish 2019 isbn 6230205181 9786230205187 length 172 pages subjects

pdf buku manajemen pariwisata researchgate - Jun 25 2022

web apr 17 2022 buku ini disusun untuk mengkaji hal hal yang terkait dalam konsep dasar manajemen pariwisata dan minat

berkunjung ulang wisata buku ini sangat penting dipelajari sebagai pengetahuan dasar

spar4204 manajemen pemasaran pariwisata perpustakaan - Sep 09 2023

web manajemen pemasaran pariwisata menggambarkan cara organisasi yang bergerak dalam kepariwisataan menyediakan produk jasa pariwisata dan destinasi wisata mencapai tujuan pemasaran dengan menentukan sasaran pasar wisatawan yang spesifik dan menggunakan sumber daya pemasaran untuk melayani sasaran pasar dengan baik

pemasaran pariwisata ppt slideshare - May 25 2022

web mar 16 2020 pemasaran pariwisata adalah suatu proses manajemen yang dilakukan oleh organisasi pariwisata nasional atau perusahaan perusahaan termasuk dalam kelompok industri pariwisata untuk melakukan identifikasi terhadap wisatawan yang sudah punya keinginan untuk melakukan perjalanan wisata dan wisatawan yang mempunyai

skripsi analisis strategi pemasaran pariwisata - Feb 19 2022

web analisis strategi pemasaran pariwisata dalam meningkatkan jumlah kunjungan wisatawan di kabupaten pelalawan studi kasus objek pariwisata alam bono oleh riki irawan penelitian ini bertujuan untuk mengidentifikasi dan menganalisis strategi pemasaran pariwisata yang dilakukan

pemasaran pariwisata google books - Nov 30 2022

web jan 24 2017 pemasaran pariwisata dr i gusti bagus rai utama m a penerbit andi jan 24 2017 buku ini baik sebagai referensi untuk memahami bauran pemasaran produk pariwisata memahami keterkaitan antara komponen pariwisata dan hubungan dengan daya tarik pariwisata memahami bentuk dan jenis pariwisata yang akan dipasarkan

mengenal jurusan manajemen pariwisata info kuliah prospek - Mar 23 2022

web sep 30 2023 jurusan manajemen pariwisata adalah salah satu jurusan yang bergerak di sektor rekreasi dan wisata dengan tambahan ilmu manajemen yang dapat menambah kemampuan dalam bekerja di industri pariwisata jurusan ini sangat cocok untuk anda yang suka travelling simak penjelasan lengkap mengenai jurusan ini beserta prospek

kurikulum mpp pariwisata upi - May 05 2023

web komunikasi pemasaran terpadu untuk pariwisata mp203 manajemen pemasaran jasa pariwisata mp304 statistika pariwisata mp303 sistem informasi manajemen pariwisata mp400 manajemen event mp306 manajemen destinasi pariwisata mp413 manajemen hospitalitas

pariwisata upi prodi kepariwisataan upi - Jun 06 2023

web manajemen resort leisure manajemen pemasaran pariwisata manajemen industri katering pendidikan pariwisata program magister agenda agenda mrl agenda mpp agenda mik agenda dikpar tour kampus

manajemen pemasaran pariwisata dan indikator - Oct 30 2022

web sep 30 2020 manajemen pemasaran pariwisata dan indikator pengukuran dr ika barokah suryaningsih s e m m prof dr r

andi sularso m s m prof dr tanti handriana s e m si samudra biru sep 30 2020 business economics buku manajemen pemasaran pariwisata dan indikator pengukuran

manajemen pemasaran pariwisata pariwisata upi - Oct 10 2023

web peneliti bidang manajemen pemasaran pariwisata memiliki kompetensi untuk mengidentifikasi permasalahan dalam manajemen dan pemasaran pariwisata mencari solusi melalui prosedur ilmiah dan mempublikasikan hasil penelitiannya

manajemen destinasi pariwisata konsep filosofi teori fungsi - Jul 27 2022

web jan 9 2023 manajemen destinasi pariwisata adalah proses mengelola dan mengkoordinasikan seluruh kegiatan pariwisata di suatu destinasi termasuk pengembangan produk pariwisata promosi pemasaran dan pengelolaan sumber daya destinasi dengan tujuan meningkatkan pengalaman wisatawan meningkatkan

manajemen pemasaran pariwisata pengembangan potensi produk wisata - Aug 08 2023

web jan 1 2021 buku ini merupakan kelanjutan dari buku manajemen pemasaran pariwisata model brand loyalty pengembangan potensi wisata di kawasan perdesaan yang merupakan luaran penelitian pada tahun

manajemen pariwisata request pdf researchgate - Jan 01 2023

web dec 15 2022 last updated 07 sep 2023 request pdf manajemen pariwisata this book consists of 15 fifteen chapters namely chapter 1 basic concepts of tourism management chapter 2 tourism planning

bisnis pariwisata perpustakaan universitas mahasaraswati - Apr 23 2022

web 2 5 bisnis pariwisata dan manajemen 11 5 sistem evaluasi pemasaran pariwisata

manajemen pariwisata sebuah tinjauan teori dan praktis - Feb 02 2023

web konservasi manajemen wisata bahari seni dan budaya tradisional sebagai objek wisata pengelolaan situs bersejarah sebagai objek wisata wisata minat khusus potensi cendra mata sebagai komoditas pariwisata manajemen bisnis wisata halal pariwisata virtual virtual tourism