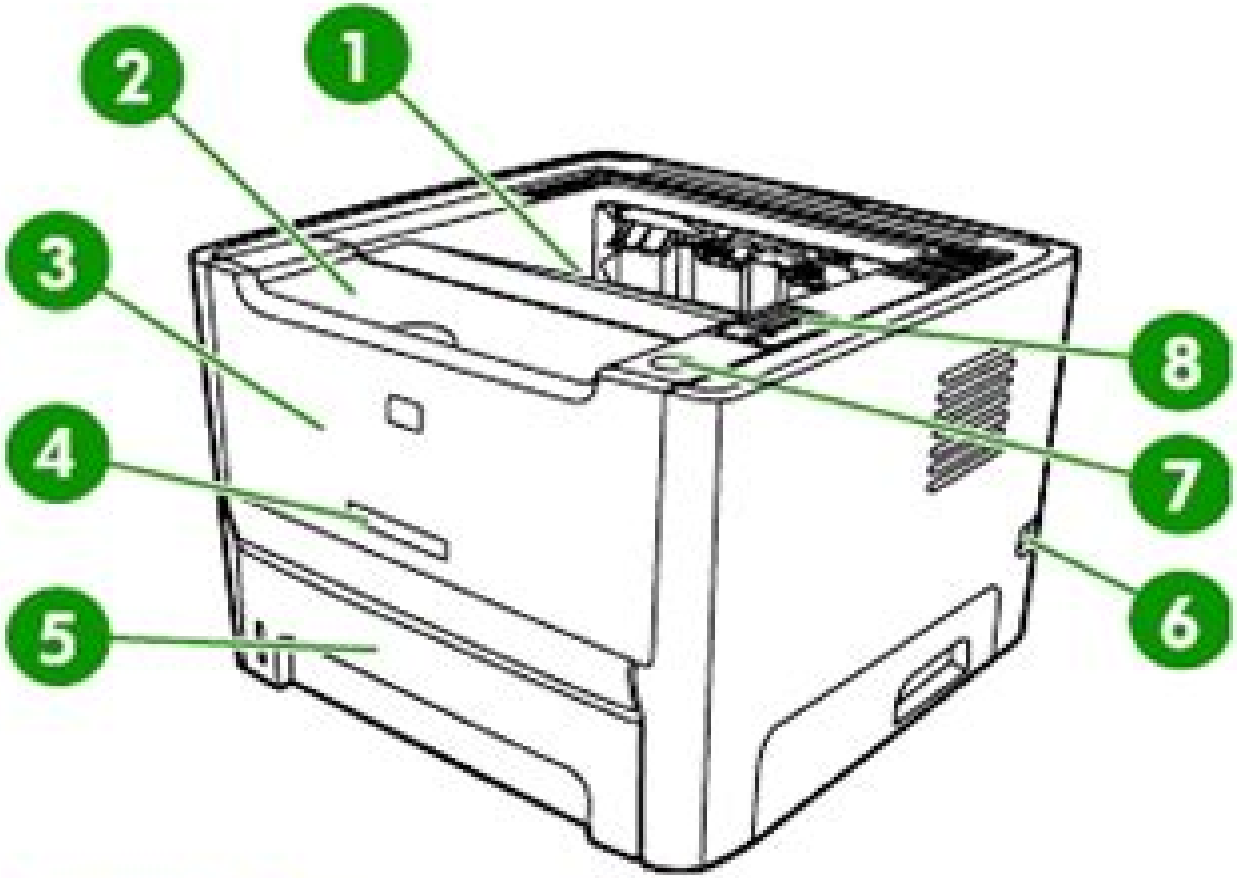

Figure 1-1 HP LaserJet P2015dn, front view

Preview: HP LaserJet P2015 service manual

Download Now!

Hp Laserjet P2015 Printer Repair Manual

Judd E. Hollander

Hp Laserjet P2015 Printer Repair Manual:

Embark on a transformative journey with is captivating work, Discover the Magic in **Hp Laserjet P2015 Printer Repair Manual** . This enlightening ebook, available for download in a convenient PDF format , invites you to explore a world of boundless knowledge. Unleash your intellectual curiosity and discover the power of words as you dive into this riveting creation. Download now and elevate your reading experience to new heights .

https://staging.conocer.cide.edu/public/Resources/default.aspx/manual%20for%20husky%205000%20watt%20generator.pdf

Table of Contents Hp Laserjet P2015 Printer Repair Manual

1. Understanding the eBook Hp Laserjet P2015 Printer Repair Manual
    - The Rise of Digital Reading Hp Laserjet P2015 Printer Repair Manual
    - Advantages of eBooks Over Traditional Books
2. Identifying Hp Laserjet P2015 Printer Repair Manual
    - Exploring Different Genres
    - Considering Fiction vs. Non-Fiction
    - Determining Your Reading Goals
3. Choosing the Right eBook Platform
    - Popular eBook Platforms
    - Features to Look for in an Hp Laserjet P2015 Printer Repair Manual
    - User-Friendly Interface
4. Exploring eBook Recommendations from Hp Laserjet P2015 Printer Repair Manual
    - Personalized Recommendations
    - Hp Laserjet P2015 Printer Repair Manual User Reviews and Ratings
    - Hp Laserjet P2015 Printer Repair Manual and Bestseller Lists
5. Accessing Hp Laserjet P2015 Printer Repair Manual Free and Paid eBooks
    - Hp Laserjet P2015 Printer Repair Manual Public Domain eBooks
    - Hp Laserjet P2015 Printer Repair Manual eBook Subscription Services
    - Hp Laserjet P2015 Printer Repair Manual Budget-Friendly Options

6. Navigating Hp Laserjet P2015 Printer Repair Manual eBook Formats
    - ePub, PDF, MOBI, and More
    - Hp Laserjet P2015 Printer Repair Manual Compatibility with Devices
    - Hp Laserjet P2015 Printer Repair Manual Enhanced eBook Features
7. Enhancing Your Reading Experience
    - Adjustable Fonts and Text Sizes of Hp Laserjet P2015 Printer Repair Manual
    - Highlighting and Note-Taking Hp Laserjet P2015 Printer Repair Manual
    - Interactive Elements Hp Laserjet P2015 Printer Repair Manual
8. Staying Engaged with Hp Laserjet P2015 Printer Repair Manual
    - Joining Online Reading Communities
    - Participating in Virtual Book Clubs
    - Following Authors and Publishers Hp Laserjet P2015 Printer Repair Manual
9. Balancing eBooks and Physical Books Hp Laserjet P2015 Printer Repair Manual
    - Benefits of a Digital Library
    - Creating a Diverse Reading Collection Hp Laserjet P2015 Printer Repair Manual
10. Overcoming Reading Challenges
    - Dealing with Digital Eye Strain
    - Minimizing Distractions
    - Managing Screen Time
11. Cultivating a Reading Routine Hp Laserjet P2015 Printer Repair Manual
    - Setting Reading Goals Hp Laserjet P2015 Printer Repair Manual
    - Carving Out Dedicated Reading Time
12. Sourcing Reliable Information of Hp Laserjet P2015 Printer Repair Manual
    - Fact-Checking eBook Content of Hp Laserjet P2015 Printer Repair Manual
    - Distinguishing Credible Sources
13. Promoting Lifelong Learning
    - Utilizing eBooks for Skill Development
    - Exploring Educational eBooks
14. Embracing eBook Trends
    - Integration of Multimedia Elements

- Interactive and Gamified eBooks

Hp Laserjet P2015 Printer Repair Manual Introduction

Free PDF Books and Manuals for Download: Unlocking Knowledge at Your Fingertips In todays fast-paced digital age, obtaining valuable knowledge has become easier than ever. Thanks to the internet, a vast array of books and manuals are now available for free download in PDF format. Whether you are a student, professional, or simply an avid reader, this treasure trove of downloadable resources offers a wealth of information, conveniently accessible anytime, anywhere. The advent of online libraries and platforms dedicated to sharing knowledge has revolutionized the way we consume information. No longer confined to physical libraries or bookstores, readers can now access an extensive collection of digital books and manuals with just a few clicks. These resources, available in PDF, Microsoft Word, and PowerPoint formats, cater to a wide range of interests, including literature, technology, science, history, and much more. One notable platform where you can explore and download free Hp Laserjet P2015 Printer Repair Manual PDF books and manuals is the internets largest free library. Hosted online, this catalog compiles a vast assortment of documents, making it a veritable goldmine of knowledge. With its easy-to-use website interface and customizable PDF generator, this platform offers a user-friendly experience, allowing individuals to effortlessly navigate and access the information they seek. The availability of free PDF books and manuals on this platform demonstrates its commitment to democratizing education and empowering individuals with the tools needed to succeed in their chosen fields. It allows anyone, regardless of their background or financial limitations, to expand their horizons and gain insights from experts in various disciplines. One of the most significant advantages of downloading PDF books and manuals lies in their portability. Unlike physical copies, digital books can be stored and carried on a single device, such as a tablet or smartphone, saving valuable space and weight. This convenience makes it possible for readers to have their entire library at their fingertips, whether they are commuting, traveling, or simply enjoying a lazy afternoon at home. Additionally, digital files are easily searchable, enabling readers to locate specific information within seconds. With a few keystrokes, users can search for keywords, topics, or phrases, making research and finding relevant information a breeze. This efficiency saves time and effort, streamlining the learning process and allowing individuals to focus on extracting the information they need. Furthermore, the availability of free PDF books and manuals fosters a culture of continuous learning. By removing financial barriers, more people can access educational resources and pursue lifelong learning, contributing to personal growth and professional development. This democratization of knowledge promotes intellectual curiosity and empowers individuals to become lifelong learners, promoting progress and innovation in various fields. It is worth noting that while accessing free Hp Laserjet P2015 Printer Repair Manual PDF books and manuals is convenient and cost-effective, it is vital to respect copyright laws and intellectual property rights. Platforms offering free

downloads often operate within legal boundaries, ensuring that the materials they provide are either in the public domain or authorized for distribution. By adhering to copyright laws, users can enjoy the benefits of free access to knowledge while supporting the authors and publishers who make these resources available. In conclusion, the availability of Hp Laserjet P2015 Printer Repair Manual free PDF books and manuals for download has revolutionized the way we access and consume knowledge. With just a few clicks, individuals can explore a vast collection of resources across different disciplines, all free of charge. This accessibility empowers individuals to become lifelong learners, contributing to personal growth, professional development, and the advancement of society as a whole. So why not unlock a world of knowledge today? Start exploring the vast sea of free PDF books and manuals waiting to be discovered right at your fingertips.

FAQs About Hp Laserjet P2015 Printer Repair Manual Books

How do I know which eBook platform is the best for me? Finding the best eBook platform depends on your reading preferences and device compatibility. Research different platforms, read user reviews, and explore their features before making a choice. Are free eBooks of good quality? Yes, many reputable platforms offer high-quality free eBooks, including classics and public domain works. However, make sure to verify the source to ensure the eBook credibility. Can I read eBooks without an eReader? Absolutely! Most eBook platforms offer web-based readers or mobile apps that allow you to read eBooks on your computer, tablet, or smartphone. How do I avoid digital eye strain while reading eBooks? To prevent digital eye strain, take regular breaks, adjust the font size and background color, and ensure proper lighting while reading eBooks. What the advantage of interactive eBooks? Interactive eBooks incorporate multimedia elements, quizzes, and activities, enhancing the reader engagement and providing a more immersive learning experience. Hp Laserjet P2015 Printer Repair Manual is one of the best book in our library for free trial. We provide copy of Hp Laserjet P2015 Printer Repair Manual in digital format, so the resources that you find are reliable. There are also many Ebooks of related with Hp Laserjet P2015 Printer Repair Manual. Where to download Hp Laserjet P2015 Printer Repair Manual online for free? Are you looking for Hp Laserjet P2015 Printer Repair Manual PDF? This is definitely going to save you time and cash in something you should think about.

Find Hp Laserjet P2015 Printer Repair Manual :

manual for husky 5000 watt generator
manual for panasonic dmp bdt220

manual for suzuki ozark 250
manual for john deere 8800
~~manual for rock ola 1458~~
manual for intek plus 20 ohv
~~manual for huskee riding lawn mower~~
manual for mercedes s
manual for massey ferguson 5455
manual for motorola bluetooth 850
~~manual for taotao moped~~
~~manual for gleaner r65 combine~~
manual for magic chef 470 dehydrator
~~manual for iec clinical centrifuge~~
manual for droid incredible

Hp Laserjet P2015 Printer Repair Manual :

3 sınıf türkçe testleri İndir 2023 2024 sorubak com - Feb 16 2022
web sınıf türkçe karşılaştırma cümleleri konu anlatımı ve etkinlikleri İndir 3 sınıf türkçe yazım karşılaştırma cümleleri test soruları İndir 3 sınıf türkçe sözcükte anlam ders etkinliği 3 sınıf türkçe testleri ve cevapları bu sayfada yer almaktadır 3
test of economic literacy third edition form pdf uniport edu - May 22 2022
web oct 14 2023 basic economics test form a test booklets national council on economic education 1981 tests for grade 56 were designed to measure the economic understanding of intermediate elementary students the bet has been nationally normed and standardized and is available in 2 editions of 29 questions each
mid term english test n 3 3rd form tunisian curriculum esl - Apr 20 2022
web 3rd form worksheets english test 3 parts 9th form end of the 3rd term test reading writing lang uage grammar vocabul ary level intermediate age 9 17 downloads 803 follow up activities diagnostic test revision 3rd form secondary level advanced age 14 17 downloads 553 mid term english test n 1 3rd form level intermediate
the test of economic literacy development and results - Jun 03 2023
web jul 1 2013 request pdf the test of economic literacy development and results in this study the authors report on the revision of the test of economic literacy for the fourth edition
test of economic literacy third edition form pdf - Oct 27 2022

web oct 4 2023 test of economic literacy third edition form book review unveiling the power of words in some sort of driven by information and connectivity the energy of words has are more evident than ever they have the capacity to inspire provoke and ignite change such could be the essence of the book test of economic literacy third

pdf test of economic literacy third edition form - Apr 01 2023

web test of economic literacy third about a third of americans either agree or sandra sequeira of the london school of economics and nathan nunn of the vancouver school of economics based on a survey of 20 000 plus third of americans believe the economy is a zero sum game

test of economic literacy c3 teachers - Sep 06 2023

web examiner s manual fourth edition 122 east 42nd street suite 2600 new york ny 10168 212 730 7007 800 338 1192 fax 212 730 1793 councilforeconed org e mail customerservice councilforeconed org

free test of economic literacy third edition form - Nov 27 2022

web test of economic literacy third edition form economic literacy may 12 2020 economic literacy among malaysian students and student teachers jul 14 2020 the test of economic literacy standardisation in the uk sep 15 2020 from here to economy nov 10 2022

3 sınıf test kitabı soru bankası Çeşitleri trendyol - Aug 25 2022

web bu çalışma seçenekleri tüm ve tekli dersler olarak hazırlanır Çocuğunuzun sadece bir dersten alıştırma yapması gerekiyorsa tüm dersler modeli almak yerine tercihinizi soru bankasından yana kullanabilirsiniz 3 sınıf test kitapları online fiyat avantajlarından yararlanmak için trendyol a göz atabilirsiniz avantajlı 3

test of economic literacy third edition form pdf uniport edu - Dec 29 2022

web jun 21 2023 test of economic literacy third edition form 1 5 downloaded from uniport edu ng on june 21 2023 by guest test of economic literacy third edition form eventually you will unconditionally discover a new experience and attainment by

test of economic literacy third edition form pdf - Feb 28 2023

web test of economic literacy third edition form the reading specialist jan 16 2023 a trusted practitioner guide and course text this book provides a complete introduction to the multiple roles of the reading specialist in grades prek 12 rita m bean offers evidence based best practices for

test of economic literacy third edition form dna viz tpq - Jul 24 2022

web test of economic literacy third edition form 1 omb no 0112487374065 test of economic literacy third edition form teaching economics in troubled times an assessment of the economic knowledge of ninth grade junior high school students in taiwan test of understanding in college economics threshold concepts and

get the free test of economic literacy third edition form pdffiller - Oct 07 2023

web browse and read test of economic literacy third edition form title type memorandum for mathematical literacy common test march 2015 pdf subject specific literacy fill form try risk free

the test of economic literacy development and results - Aug 05 2023

web the test of economic literacy is a nationally normed and standardized measure of the economic understanding of u s high school students the economic content of the test is based on the voluntary national content standards in economics which is used to establish the content validity for the test

test of economic literacy third edition form 2023 - Sep 25 2022

web apr 4 2023 test of economic literacy third edition form is available in our digital library an online access to it is set as public so you can get it instantly our book servers spans in multiple locations allowing you to get the most less latency time to download any of our books like this one merely said the test of economic literacy third edition

test of economic literacy third edition form - Jan 30 2023

web test of economic literacy third edition form economic competence and financial literacy of young adults oct 18 2022 the authors take a detailed look at the economic competence and financial literacy of young adults especially of those who start an apprenticeship or who take up their studies at a university economic

test of economic literacy third edition form - Mar 20 2022

web jan 19 2023 4716899 test of economic literacy third edition form 1 15 downloaded from 206 189 230 158 on by guest test of economic literacy third edition form yeah reviewing a book test of economic literacy third edition form could increase your near friends listings this is just one of the solutions for you to be successful as

test of economic literacy third edition form avvu com tr - Jun 22 2022

web jun 5 2023 digital literacy whether you are new to computing or have some experience digital literacy in india is a key for socio economic progress and the indian literacy rate has grown to 73 2011 census figure with recent reports of 80 literacy the litera archives and past articles from the philadelphi step right up get your tickets for wtf an

3 sinif soru bankasi eĞİtİmevİ net eĞİtİme kaynak - May 02 2023

web 3 sınıf türkçe sınavları Çalışmaları testleri test İndir Çöz kuralli ve devrİk cÜmleler okuduĞunu anlama soyut ve somut adlar tÜrkÇe deĞerlendİrme tÜrkÇe test 1 tÜrkÇe test 2 1 donem degerlendirme testi sorulari doc 100 sorulu deyimler testi doc

test of economic literacy third edition form pdf uniport edu - Jul 04 2023

web oct 11 2023 test of economic literacy third edition form is available in our digital library an online access to it is set as public so you can get it instantly our book servers spans in multiple countries allowing you to get the most less latency time to

writing a counterargument paragraph uagc writing center - May 01 2022
web in your paragraph identify the opposing argument respond to it by discussing the reasons the argument is incomplete weak unsound or illogical provide examples or evidence to show why the opposing argument is unsound or provide explanations of how the opposing argument is incomplete or illogical
formula for refutation and rebuttal writing skills lab lumen - Oct 06 2022
web learning objective recognize strategies for rebuttal and refutation of counterargument though writers may handle rebuttal and refutation in different ways there is a formula for success in academic argument here are the key parts of that formula accurately represent opposing viewpoints
writing a counterargument and refutation eluprogram com - Jan 09 2023
web refutation the refutation paragraph must prove that your opponents objection counterargument is wrong to do this you must answer the objection in a fair and logical manner this paragraph is structured as follows 1 opening sentence it summarizes the other side s objection and acknowledges the
writing a counterargument and refutation pdf terminal - Dec 08 2022
web writing a counterargument and refutation counterargument the counterargument paragraph is developed in much the same way that an argument paragraph is developed the difference is that the counterargument is your opponents the other sides argument that explains why you are wrong this paragraph is structured as follows 1 topic sentence
writing a counterargument and refutation pdf cannabis - Nov 07 2022
web original title writing counterargument refutation uploaded by hossam abu baker copyright all rights reserved flag for inappropriate content of 3 writing a counterargument and refutation noting opposing views and then showing why they are wrong helps make your argument strong and the essay more developed the
10 12 introduction to rebuttal and refutation of counterargument - Sep 05 2022
web when writers are able to skillfully rebut or refute a view that runs counter to their claims it strengthens their work rebuttal and refutation are common in all types of argument including academic argument as you complete more advanced work in college you will be expected to address counterargument often
counterargument and refutation development academic writing - Jul 15 2023
web 41 counterargument and refutation development in an argumentative essay you need to convince your audience that your opinion is the most valid opinion to do so your essay needs to be balanced it needs an opposing opposite viewpoint known as
rebuttal sections purdue owl purdue university - Jun 02 2022
web your refutation the specifics of your counterargument will depend upon the nature of your disagreement if you challenge

the writer s evidence then you must present the more recent evidence if you challenge assumptions then

5 8 writing concession and counterargument humanities - Jul 03 2022

web 5 8 writing concession and counterargument humanities libretexts 5 7 finding and refuting logical fallacies 5 9 hedging gabriel winer elizabeth wadell berkeley city college laney college via asccc open educational resources initiative oeri table of contents reading about multiple perspectives

counterargument and refutation argumentative essay english writing - Mar 11 2023

web oct 19 2020 are you confused about writing a counterargument or refutation for an argumentative essay this video clearly explains how to write each one in complete detail with many examples

argument counterargument refutation english 087 - Aug 16 2023

web counterargument at least one paragraph which explains the opposite point of view concession a sentence or two acknowledging that there could be some truth to the counterargument refutation also called rebuttal sentences which explain why the counterargument is not as strong as the original argument

teacher s notes counter argument and refutation teach - Feb 10 2023

web counter argument and refutation activity type writing exercises identifying paraphrasing writing sentences paragraph writing focus counter arguments refutations concessions aim to learn and practice writing a counter argument and refutation paragraph that includes a concession for persuasive essays preparation

argumentative essays the counter argument refutation - May 13 2023

web argumentative essays the counter argument refutation an argumentative essay presents an argument for or against a topic for example if your topic is working from home then your essay would either argue in favor of working from home this is the for side or against working from home

counterarguments university writing speaking center - Feb 27 2022

web counterargument in two steps respectfully acknowledge evidence or standpoints that differ from your argument refute the stance of opposing arguments typically utilizing words like although or however in the refutation you want to show the reader why your position is more correct than the opposing idea where to put a counterargument

writing a counterargument and refutation english current - Apr 12 2023

web the refutation sometimes called rebuttal paragraph the refutation paragraph uses logical evidence to explain why the opposing view is incomplete problematic or simply wrong the opening sentence start with an opening sentence this sentence summarizes the opposing view use words like may or

introduction to rebuttal and refutation of counterargument writing - Jun 14 2023

web what you ll learn to do evaluate strategies for rebuttal and refutation of counterargument an integral part of composing

a strong argument is including counterargument this can be difficult especially if a writer is arguing for a position s he already agrees with

counterargument harvard college writing center - Aug 04 2022

web in general to address a counterargument you ll need to take the following steps state the counterargument and explain why a reasonable reader could raise that counterargument counter the counterargument how you grapple with a counterargument will depend on what you think it means for your argument

how to write a counterargument papersowl com - Mar 31 2022

web feb 2 2023 a counter argument is a perspective or point of view that contradicts or refutes the opposing argument presented in a persuasive essay usually to win a debate

writing a paper responding to counterarguments academic - Jan 29 2022

web incorporating counterarguments into your writing can seem counterintuitive at first and some writers may be unsure how to do so to help you incorporate counterarguments into your argument we recommend following the steps

formula for refutation and rebuttal english composition 1 - Dec 28 2021

web describe strategies for effective refutation and rebuttal counterargument an integral part of composing a strong argument is including a counterargument this can be difficult especially if a writer is arguing for a position they already agree with

healthcare worker reference and recommendation letter sample - Jun 23 2022

web sep 19 2023 writing a great reference and recommendation letter for a healthcare worker position requires careful thought and attention here are some guidelines to help you craft an effective letter 1 start with a formal introduction

home health aide recommendation letter template writolay - Nov 28 2022

web jul 8 2021 home health aide cover letter 6 types templates dietary aide cover letter 4 templates housekeeping aide cover letter 4 templates software developer recommendation letter 20 templates how to write a recommendation letter 10 free templates care aide cover letter example 4 templates case aide cover letter

caregiver reference letter livecareer com - Jun 04 2023

web this letter is a letter of reference for sally umbile to be part of your team as a caregiver sally spent the better part of the last four years doing in home care for my mother and we could not have been happier with the results

caregiver recommendation letter letter samples livecareer - May 03 2023

web a caregiver recommendation letter lets employers tell potential employers about the reasons why they should hire a former caregiver employees may seek a new job after moving attending school or for any other number of reasons

2 caregiver reference and recommendation letter samples - Sep 07 2023

web jun 2 2023 this page contains 2 great examples of recommendations and reference letters for a caregiver position useful for the elderly disabled live in and in home caregivers

caregiver recommendation letter great sample resume - Apr 21 2022

web this sample caretaker recommendation letter is for the grown children of an elderly woman who is seeking a caregiver to live with her the letter is from the son of an elderly lady the applicant cared for over several years until the lady could no longer reside in her home

how to write a healthcare recommendation letter plus examples indeed - May 23 2022

web aug 25 2023 a healthcare recommendation letter is a formal document that highlights a medical professional s job performance or academic capabilities it outlines the reasons why an applicant is qualified to work in a certain position or enter a specific educational program

home health aide recommendation letter sample livecareer - Apr 02 2023

web the home health aide recommendation letter can help with a new hire or promotion by offering a more personal review of an applicant s attributes mallory pineda city state zip code cell 000 000 0000 email email com felicity weeks this is a recommendation for susan selsby for the open home health aide position

personal care assistant recommendation letter livecareer - Jan 31 2023

web felicity weeks i am writing as the personal care supervisor of the palm view care facility to recommend one of our personal care assistants shana wilson for a similar position at your facility shana has worked for us for three years and in that time she has proved herself to be a highly conscientious and diligent employee

home health aide reference letter great sample resume - Jul 25 2022

web home health aide reference letter a letter referring a home health aide for a job should stress the trustworthiness and integrity of the applicant because these are qualities that are important to employers in the industry

how to write an caregiver recommendation letter with - Oct 28 2022

web dec 14 2022 introduction include your relationship to the caregiver and the circumstances in which you were able to observe their abilities when composing a letter of recommendation for a caregiver your association with the applicant gives the prospective employer context and lends authority to your letter

how to write a housekeeper letter of recommendation in 8 steps - Aug 26 2022

web jun 24 2022 a housekeeper letter of recommendation is a message written on the behalf of someone who works as a housekeeper at a private home hotel or any other establishment that requires cleaning its purpose is to explain to a potential employer why a candidate is a good fit for a housekeeping job

10 best caregiver letter of recommendation templates for 2021 - Sep 26 2022

web sep 19 2023 letter of recommendation for caregiver s education dear admissions officer s name i am writing this recommendation letter for caregiver s name in support of his her application to school s name for degree program

how to write a home health aide reference letter with examples indeed - Jul 05 2023

web jan 26 2023 what is a home health aide reference letter a home health aide hha reference letter is a one page document that details the skill sets and job responsibilities of a professional caregiver the letter typically provides an assessment of their work conduct and primary characteristics

home health aide recommendation letter sample support - Mar 01 2023

web dec 29 2022 a reference letter can be used to provide evidence of a person s qualifications and attributes as a home health aide it can also be used to demonstrate the value of their skills and the positive impact they have had on those they have cared for

caregiver reference letter sample wikitechy letters - Mar 21 2022

web this letter is a letter of reference for hellen to be part of your team as a career hellen spent the better part of the last four years doing in home care for my mother and we could not have been happier with the results my mother is totally fond of hellen and was sad to hear that hellen was relocating to your state

home health aide cover letter example and template for 2023 - Feb 17 2022

web may 9 2023 555 555 0111 tanya rosen email com san francisco ca may 9 2023 dear hiring manager my name is tanya flores and i m writing to express my interest in the open position of home health aide at bay area residential care providers llc as an experienced home health provider with specialized knowledge in the field of geriatric

recommendation letter for home health aide 10 samples - Aug 06 2023

web contents show recommendation letter for home health aide here are some samples to guide you sample 1 dear name thank you for considering me for the position title in your home health aide team i am excited about the opportunity to work with you and contribute to the overall well being of your loved ones

how to write a letter of recommendation care com resources - Dec 30 2022

web may 19 2021 how to write a letter of recommendation 8 tips on creating a recommendation letter for your nanny babysitter pet sitter senior care aide etc

how to write an caregiver recommendation letter with template indeed - Oct 08 2023

web jan 11 2023 what to include in a caregiver letter of recommendation a letter of recommendation can include the following elements introduction when writing a caregiver letter of recommendation including how you know the caregiver and under what circumstances you observed their skill sets