Electrical Hoist Wiring Diagram

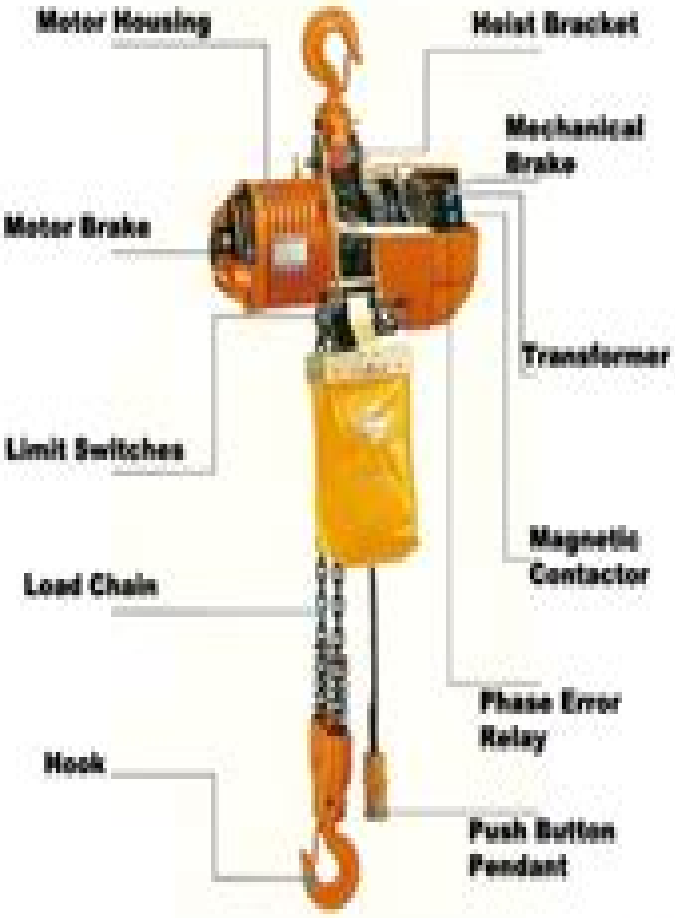

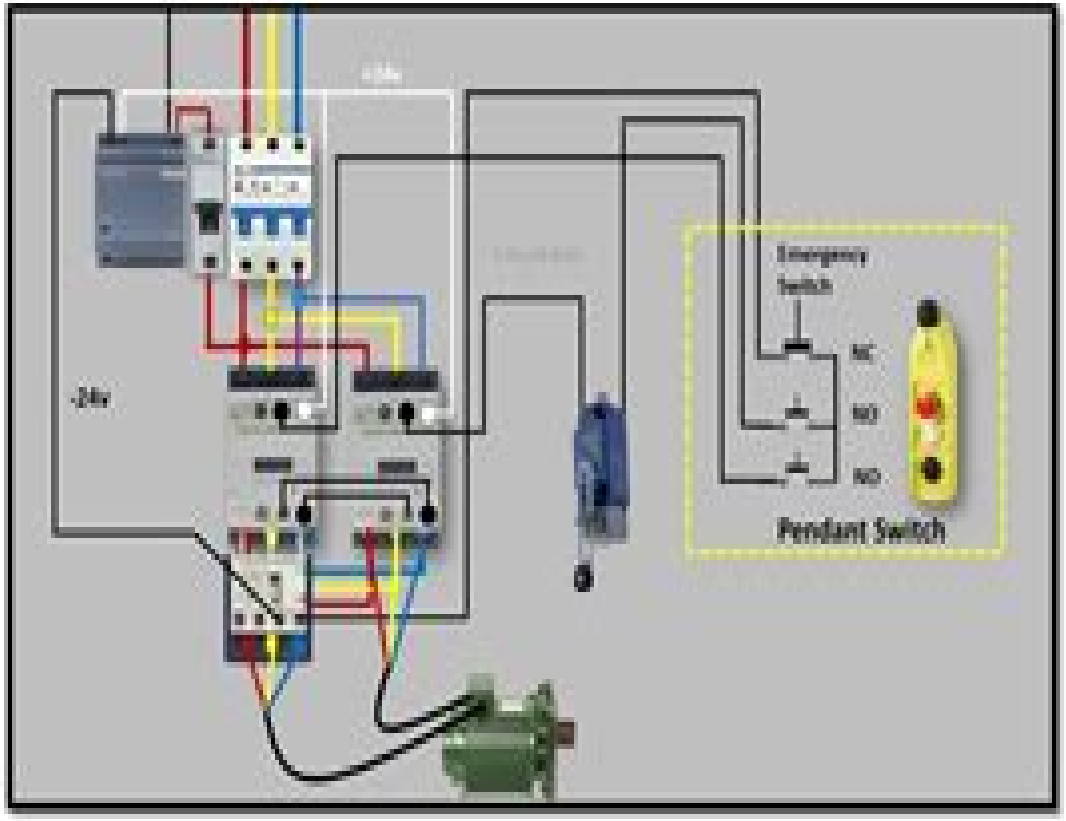

Circuit Info

Eot Crane Wire Rope Connection Diagram

J Spring

Eot Crane Wire Rope Connection Diagram:

Embark on a breathtaking journey through nature and adventure with Crafted by is mesmerizing ebook, Natureis Adventure: **Eot Crane Wire Rope Connection Diagram** . This immersive experience, available for download in a PDF format (Download in PDF: *), transports you to the heart of natural marvels and thrilling escapades. Download now and let the adventure begin!

https://staging.conocer.cide.edu/book/uploaded-files/index.jsp/Jesus%20The%20Revolutionary.pdf

Table of Contents Eot Crane Wire Rope Connection Diagram

1. Understanding the eBook Eot Crane Wire Rope Connection Diagram
    - The Rise of Digital Reading Eot Crane Wire Rope Connection Diagram
    - Advantages of eBooks Over Traditional Books
2. Identifying Eot Crane Wire Rope Connection Diagram
    - Exploring Different Genres
    - Considering Fiction vs. Non-Fiction
    - Determining Your Reading Goals
3. Choosing the Right eBook Platform
    - Popular eBook Platforms
    - Features to Look for in an Eot Crane Wire Rope Connection Diagram
    - User-Friendly Interface
4. Exploring eBook Recommendations from Eot Crane Wire Rope Connection Diagram
    - Personalized Recommendations
    - Eot Crane Wire Rope Connection Diagram User Reviews and Ratings
    - Eot Crane Wire Rope Connection Diagram and Bestseller Lists
5. Accessing Eot Crane Wire Rope Connection Diagram Free and Paid eBooks
    - Eot Crane Wire Rope Connection Diagram Public Domain eBooks
    - Eot Crane Wire Rope Connection Diagram eBook Subscription Services
    - Eot Crane Wire Rope Connection Diagram Budget-Friendly Options

6. Navigating Eot Crane Wire Rope Connection Diagram eBook Formats
    - ePub, PDF, MOBI, and More
    - Eot Crane Wire Rope Connection Diagram Compatibility with Devices
    - Eot Crane Wire Rope Connection Diagram Enhanced eBook Features
7. Enhancing Your Reading Experience
    - Adjustable Fonts and Text Sizes of Eot Crane Wire Rope Connection Diagram
    - Highlighting and Note-Taking Eot Crane Wire Rope Connection Diagram
    - Interactive Elements Eot Crane Wire Rope Connection Diagram
8. Staying Engaged with Eot Crane Wire Rope Connection Diagram
    - Joining Online Reading Communities
    - Participating in Virtual Book Clubs
    - Following Authors and Publishers Eot Crane Wire Rope Connection Diagram
9. Balancing eBooks and Physical Books Eot Crane Wire Rope Connection Diagram
    - Benefits of a Digital Library
    - Creating a Diverse Reading Collection Eot Crane Wire Rope Connection Diagram
10. Overcoming Reading Challenges
    - Dealing with Digital Eye Strain
    - Minimizing Distractions
    - Managing Screen Time
11. Cultivating a Reading Routine Eot Crane Wire Rope Connection Diagram
    - Setting Reading Goals Eot Crane Wire Rope Connection Diagram
    - Carving Out Dedicated Reading Time
12. Sourcing Reliable Information of Eot Crane Wire Rope Connection Diagram
    - Fact-Checking eBook Content of Eot Crane Wire Rope Connection Diagram
    - Distinguishing Credible Sources
13. Promoting Lifelong Learning
    - Utilizing eBooks for Skill Development
    - Exploring Educational eBooks
14. Embracing eBook Trends
    - Integration of Multimedia Elements

- Interactive and Gamified eBooks

Eot Crane Wire Rope Connection Diagram Introduction

In todays digital age, the availability of Eot Crane Wire Rope Connection Diagram books and manuals for download has revolutionized the way we access information. Gone are the days of physically flipping through pages and carrying heavy textbooks or manuals. With just a few clicks, we can now access a wealth of knowledge from the comfort of our own homes or on the go. This article will explore the advantages of Eot Crane Wire Rope Connection Diagram books and manuals for download, along with some popular platforms that offer these resources. One of the significant advantages of Eot Crane Wire Rope Connection Diagram books and manuals for download is the cost-saving aspect. Traditional books and manuals can be costly, especially if you need to purchase several of them for educational or professional purposes. By accessing Eot Crane Wire Rope Connection Diagram versions, you eliminate the need to spend money on physical copies. This not only saves you money but also reduces the environmental impact associated with book production and transportation. Furthermore, Eot Crane Wire Rope Connection Diagram books and manuals for download are incredibly convenient. With just a computer or smartphone and an internet connection, you can access a vast library of resources on any subject imaginable. Whether youre a student looking for textbooks, a professional seeking industry-specific manuals, or someone interested in self-improvement, these digital resources provide an efficient and accessible means of acquiring knowledge. Moreover, PDF books and manuals offer a range of benefits compared to other digital formats. PDF files are designed to retain their formatting regardless of the device used to open them. This ensures that the content appears exactly as intended by the author, with no loss of formatting or missing graphics. Additionally, PDF files can be easily annotated, bookmarked, and searched for specific terms, making them highly practical for studying or referencing. When it comes to accessing Eot Crane Wire Rope Connection Diagram books and manuals, several platforms offer an extensive collection of resources. One such platform is Project Gutenberg, a nonprofit organization that provides over 60,000 free eBooks. These books are primarily in the public domain, meaning they can be freely distributed and downloaded. Project Gutenberg offers a wide range of classic literature, making it an excellent resource for literature enthusiasts. Another popular platform for Eot Crane Wire Rope Connection Diagram books and manuals is Open Library. Open Library is an initiative of the Internet Archive, a non-profit organization dedicated to digitizing cultural artifacts and making them accessible to the public. Open Library hosts millions of books, including both public domain works and contemporary titles. It also allows users to borrow digital copies of certain books for a limited period, similar to a library lending system. Additionally, many universities and educational institutions have their own digital libraries that provide free access to PDF books and manuals. These libraries often offer academic texts, research papers, and technical manuals, making them invaluable resources for students and researchers. Some notable examples include MIT

OpenCourseWare, which offers free access to course materials from the Massachusetts Institute of Technology, and the Digital Public Library of America, which provides a vast collection of digitized books and historical documents. In conclusion, Eot Crane Wire Rope Connection Diagram books and manuals for download have transformed the way we access information. They provide a cost-effective and convenient means of acquiring knowledge, offering the ability to access a vast library of resources at our fingertips. With platforms like Project Gutenberg, Open Library, and various digital libraries offered by educational institutions, we have access to an ever-expanding collection of books and manuals. Whether for educational, professional, or personal purposes, these digital resources serve as valuable tools for continuous learning and self-improvement. So why not take advantage of the vast world of Eot Crane Wire Rope Connection Diagram books and manuals for download and embark on your journey of knowledge?

FAQs About Eot Crane Wire Rope Connection Diagram Books

1. Where can I buy Eot Crane Wire Rope Connection Diagram books? Bookstores: Physical bookstores like Barnes & Noble, Waterstones, and independent local stores. Online Retailers: Amazon, Book Depository, and various online bookstores offer a wide range of books in physical and digital formats.
2. What are the different book formats available? Hardcover: Sturdy and durable, usually more expensive. Paperback: Cheaper, lighter, and more portable than hardcovers. E-books: Digital books available for e-readers like Kindle or software like Apple Books, Kindle, and Google Play Books.
3. How do I choose a Eot Crane Wire Rope Connection Diagram book to read? Genres: Consider the genre you enjoy (fiction, non-fiction, mystery, sci-fi, etc.). Recommendations: Ask friends, join book clubs, or explore online reviews and recommendations. Author: If you like a particular author, you might enjoy more of their work.
4. How do I take care of Eot Crane Wire Rope Connection Diagram books? Storage: Keep them away from direct sunlight and in a dry environment. Handling: Avoid folding pages, use bookmarks, and handle them with clean hands. Cleaning: Gently dust the covers and pages occasionally.
5. Can I borrow books without buying them? Public Libraries: Local libraries offer a wide range of books for borrowing. Book Swaps: Community book exchanges or online platforms where people exchange books.
6. How can I track my reading progress or manage my book collection? Book Tracking Apps: Goodreads, LibraryThing, and Book Catalogue are popular apps for tracking your reading progress and managing book collections. Spreadsheets: You can create your own spreadsheet to track books read, ratings, and other details.

7. What are Eot Crane Wire Rope Connection Diagram audiobooks, and where can I find them? Audiobooks: Audio recordings of books, perfect for listening while commuting or multitasking. Platforms: Audible, LibriVox, and Google Play Books offer a wide selection of audiobooks.
8. How do I support authors or the book industry? Buy Books: Purchase books from authors or independent bookstores. Reviews: Leave reviews on platforms like Goodreads or Amazon. Promotion: Share your favorite books on social media or recommend them to friends.
9. Are there book clubs or reading communities I can join? Local Clubs: Check for local book clubs in libraries or community centers. Online Communities: Platforms like Goodreads have virtual book clubs and discussion groups.
10. Can I read Eot Crane Wire Rope Connection Diagram books for free? Public Domain Books: Many classic books are available for free as theyre in the public domain. Free E-books: Some websites offer free e-books legally, like Project Gutenberg or Open Library.

Find Eot Crane Wire Rope Connection Diagram :

jesus the revolutionary
jesus plan for a new world the sermon on the mount
~~jesus was a leo~~
jesus the christ.
jimmys snowy
~~jewish culture and identity in the soviet union~~
jesus sang the psalms learning about god while singing the psalms
jesus selfportrait by god
jewish parenting wisdom
jfk and art
jesus the king of kings stories of jesus
jesus the magician
jews and feminism ambivalent search for home
~~jew christian muslim war~~
jewish music

Eot Crane Wire Rope Connection Diagram :

sabre training manual pdf travel agency airlines scribd - Sep 23 2023
web feb 13 2003 sabre training manual by glenn a burroughs ceo certified travel services inc contains quick start training program components relationships fees and commissions format of training program introduction types of trips types of fares classes of service fares 1 1 1 2 2 4 4 5 6 6 lesson one air travel lesson two

sabre training manual certfied travel by e8799 issuu - Apr 06 2022
web jan 16 2018 read sabre training manual certfied travel by e8799 on issuu and browse thousands of other publications on our platform start here

sabre self paced training the travel institute - Aug 22 2023
web the sabre self paced training tool helps you expand your skills to book air cars hotels and more in the sabre global distribution system gds self paced training enables you to customize your own training programs which are available without ever having to leave your home or office

sabre self paced training the travel institute sabre gds training - Nov 13 2022
web may 30 2023 the sabre self paced training tool helps you expand respective skills to book air cars hotels and more include which foil world distribution system gds newsletter find adenine certified traveller agent

iata foundation in travel and tourism with sabre diploma - Mar 17 2023
web 200 hour partner taught or self study course acquire essential knowledge and skills to work in the travel and tourism industry and become an effective travel professional provide advice on flight accommodation and tour products and how to ensure travelers fulfill necessary travel requirements

sabre training courses viasinc - Aug 10 2022
web 45 hour training course with worksheets an entry level gds training course for travel advisors standalone course for one student covers native sabre commands printable worksheets and format recaps exercises in freeform sabre emulator access to huge database of gds data usd 199 99

sabre ott online travel training travel tourism elearning - Jan 15 2023
web sabre most travel companies use a gds global distribution system to book flights hotels and car hire learning a gds has many benefits it could mean securing your ideal travel job sabre was developed by american airlines in the 1960s and now boasts a huge worldwide usage

online sabre training academy travel usa - Feb 16 2023
web sabre overview this course is taught in actual live time with homework done in live time the most exciting component of this program is the hands on computer training experience in a real working travel agency within hours you

194241829 sabre training manual pdf t Çz wÜxtÅá vÉÅx - May 07 2022
web view 194241829 sabre training manual pdf from busi misc at carleton university t Çz wÜxtÅá vÉÅx gÜâx sabre training manual certified travel services inc 6444 nw expressway suite 808 oklahoma
sabre gds training sabre gds course sabre gds tutorial udemy - Oct 12 2022
web sabre basics to advance level training check availability of flight on sabre availability command of sabre command to sell seat in sabre commands to complete pnr of sabre power shopper of sabre all basic sabre commands sabre gds training sabre booking system this training will make you able to learn basic sabre to advance level you
sabre training sabre - Apr 18 2023
web 1 log into agency eservices 2 select training click on my training 3 you are now good to go sabre training launch dates asia pacific 28th september 2017 latin america and the caribbean 12th october 2017 europe the middle east and africa 26th october 2017 north america 9th november 2017 we would like to hear from you
training sabre indonesia - Feb 04 2022
web sabre indonesia menyediakan ujian sertifikasi selama satu hari dengan biaya terjangkau untuk para siswa dari lembaga pendidikan yang sudah menyelenggarakan pelatihan dasar reservasi hubungi kami sewa ruang training sabre indonesia juga menyediakan ruang training lengkap dengan fasilitasnya untuk umum info selengkapnya hubungi kami
sabre training manual pdf travel agency international - Mar 05 2022
web sabre training instructions free download as pdf filing pdf text file txt with read online for free
sabre training complete sabre basic training part 1 youtube - Jul 09 2022
web oct 21 2016 sabre basic training check availability of flight on sabreavailability command of sabrecommand to sell seat in sabrecommands to complete pnr of sabrefree tra
introducing new sabre training youtube - Sep 11 2022
web sep 19 2017 introducing new sabre training sabre training is the new modern portal for sabre connected travel agents to manage their training courses more details here
sabre free travel training and incentives for successful travel - Dec 14 2022
web enhance your knowledge register for free webinars ott is the leading online training and marketing platform for the travel tourism industry our online training and marketing platform proved highly effective and by 2013 had the travel industry s largest e learning member database and library with over 200 live courses
sabre self paced training the travel institute sabre training sabre - May 19 2023
web the sabre self paced vocational tool helps you expand your skills into book air cars hotels and more in an sabre worldwide distribution netz gds self paced training enables you to customize your own education programs which are

existing without ever having to let your back or office

sabre self paced training the travel institute how to choose - Jun 08 2022

web jun 13 2023 the sabre self paced education tool serves you expands your skills the book air driving guest and better in the broadsword global distribution system gds newsletter find a certified journey agent

sabre self paced training the travel institute sabre quick - Jul 21 2023

web self paced training enables you to customize your own instruction applications the are available without ever having to let your home or office it s ideal for anyone interested in entering a career in travel or for anybody wanting at refresh his sabre skills the 170 hours include the followers topics air car and hotel reservations

sabre self paced training the travel institute virtual oc - Jun 20 2023

web the sabre self paced training tool helps you expand your skills to book air cars hotels and see by the sabre global distribution system gds self paced training enables i to customize your our training programs which live available without ever having to leave get home other office

best java for kids course to learn how to code in java - Jun 13 2023

web java for kids and grown ups learn to code and cre friendship for grown ups jan 27 2022 do you long for a true friend isn t that what we all want to be seen in all our

pdf java for kids and grown ups learn to code and cre - Apr 11 2023

web java for kids and grown ups learn to code and cre preliminary report on the uniform consumer credit code nov 09 2021 from legislation to integration apr 02

java for kids and grown ups learn to code and cre pdf - May 12 2023

web learn coding basics and how to apply them analyze data and automate routine tasks on the job get the foundation you need to launch a career as a coder add html

java coding for kids learning starter guide for parents - Aug 15 2023

web aug 6 2020 why is java a good language for kids to learn java is a multi platform language which can be used on all sorts of hardware java s enormous online

java coding for kids codeadvantage - Jul 14 2023

web apr 24 2019 students will learn to code java using a free ide eclipse downloaded to their own computer students will write all the code themselves following the online

java for kids and grown ups learn to code and cre pdf pdf - Apr 30 2022

web jun 15 2023 java for kids and grown ups learn to code and cre pdf yeah reviewing a books java for kids and grown ups learn to code and cre pdf could

java programming for kids create learn - Dec 07 2022
web we come up with the money for java for kids and grown ups learn to code and cre and numerous ebook collections from fictions to scientific research in any way
read free java for kids and grown ups learn to code and cre - Oct 17 2023
web java for kids and grown ups jun 01 2023 learn computer programming right from the start in a visual and simple way through java language this book is a different way to
java coding for kids vedantu - Sep 04 2022
web 2 java for kids and grown ups learn to code and cre 2019 12 31 the game s world in this edifying resource readers will get hooked on getting behind the scenes
java for kids and grown ups learn to code and cre 2023 - Feb 09 2023
web java for kids and grown ups learn to code and cre encyclopedia of education and human development feb 16 2020 this comprehensive and exhaustive reference work
javaforkidsandgrownupslearntocodeandcre - Jul 02 2022
web python for kids teaches essential python skills to kids ages 8 and up and it includes a simply introduction to java java script scratch c and others detailed explanation
java for kids and grown ups learn to code and cre - Oct 05 2022
web nov 9 2023 kids curious about coding can learn java through various online tutorials or courses also parents can help their children learn simple java code at home java
java for kids and grown ups learn to code and cre copy ftp - Dec 27 2021
web java for kids and grown ups learn to code and cre the secret knowledge of grown ups apr 09 2020 a humerous revelation of the real reasons why adults tell children to
java for kids and grown ups learn to code and cre 2022 - Aug 03 2022
web components and confgure your development environment learn and use java language fundamentals learn object oriented design principles master the frequently used java
java for kids and grown ups learn to code and cre pdf - Jun 01 2022
web may 17 2023 merely said the java for kids and grown ups learn to code and cre pdf is universally compatible past any devices to read core java an integrated
java for kids and grown ups learn to code and cre pdf - Mar 30 2022
web java for kids and grown ups computer programming the doctrine 2 0 full breakdown of html python c c coding raspberry pi java sql html and black hat

java for kids and grown ups learn to code and cre 2022 - Jan 28 2022
web kindly say the java for kids and grown ups learn to code and cre is universally compatible with any devices to read java for kids and grown ups learn to code
read free java for kids and grown ups learn to code and cre - Jan 08 2023
web java is a very powerful programming language java is an object oriented language which means it relies on classes and objects an object has states and procedures and the
java for kids a guide for parents of new coders codeyoung - Sep 16 2023
web jun 19 2022 what is java why java coding what is java used for learn java for kids how to get started basics of kids coding language is java a good
java for kids and grown ups learn to code and cre copy - Feb 26 2022
web java for kids and grown ups o reilly media inc a comprehensive guide to get started with java and gain insights into major concepts such as object oriented functional and
pdf java for kids and grown ups learn to code and cre - Mar 10 2023
web to raise your grown ups sep 07 2021 hubert horatio bartle bobton trent is back in this hilarious and gloriously illustrated book for ages six and up from the superstar creator of
download free java for kids and grown ups learn to code - Nov 25 2021

java for kids and grown ups learn to code and cre steve - Nov 06 2022
web javascript for kids java for kids and grown ups java for kids and grown ups createspace independent publishing platform java programming for kids
download here i am a novel english edition de jonathan - Apr 29 2022
web mar 26 2020 here i am a novel english edition de jonathan safran foer descripción instant new york times bestsellera new york times notable book of 2016a time
here i am a novel english edition kindle edition amazon de - Mar 09 2023
web here i am a novel english edition ebook foer jonathan safran amazon de kindle store
here i am a novel - Jan 27 2022
web first 100 words bilingual primeras 100 palabras spanish english bilingual spanish edition
here i am a novel kindle edition by foer jonathan - Aug 14 2023
web sep 6 2016 a monumental novel from the bestselling author of everything is illuminated and extremely loud and incredibly close jonathan safran foer s here i am in the

here i am kindle edition by foer jonathan safran literature - Dec 06 2022
web sep 6 2016 here i am kindle edition by foer jonathan safran download it once and read it on your kindle device pc phones or tablets use features like bookmarks note
buy here i am a novel book online at low prices in india here - Nov 24 2021
web amazon in buy here i am a novel book online at best prices in india on amazon in read here i am a novel book reviews author details and more at amazon in free delivery
here i am novel wikipedia - May 11 2023
web here i am is a 2016 novel by jonathan safran foer it depicts a series of events that impact members of a jewish family living in washington d c which some reviewers suggest
here i am a novel by jonathan safran foer 2016 compact - Sep 03 2022
web here i am a novel by jonathan safran foer 2016 compact disc unabridged edition be the first to write a review fiction books in english jonathan swift fiction 1st
download here i am a novel english edition pdf - Feb 25 2022
web ebook deutsch here i am a novel english edition online romane lesen here i am a novel english edition kostenlos romane lesen here i am a novel english edition
amazon com here i am a novel audible audio edition - Jan 07 2023
web these are the questions at the heart of jonathan safran foer s first novel in eleven years a work of extraordinary scope and heartbreaking intimacy unfolding over four
here i am a novel international edition abebooks - Nov 05 2022
web here i am a novel international edition by foer jonathan safrn at abebooks co uk isbn 10 1250147026 isbn 13 9781250147028 macmillan usa 2017 softcover
here i am by jonathan safran foer goodreads - Jul 13 2023
web a monumental new novel from the bestselling author of everything is illuminated and extremely loud and incredibly close in the book of genesis when god calls out
here i am a novel jonathan safran foer google books - Jun 12 2023
web sep 6 2016 these are the questions at the heart of jonathan safran foer s first novel in eleven years a work of extraordinary scope and heartbreaking intimacy unfolding over
amazon co jp here i am a novel english edition ebook foer - Oct 04 2022
web sep 6 2016 amazon co jp here i am a novel english edition ebook foer jonathan safran kindle store
here i am reading group choices - Jul 01 2022

web jonathan safran foer a monumental new novel from the bestselling author of everything is illuminated and extremely loud and incredibly close in the book of genesis when god

buy here i am a novel book online at low prices in india here - Aug 02 2022

web amazon in buy here i am a novel book online at best prices in india on amazon in read here i am a novel book reviews author details and more at amazon in free delivery

here i am a novel - Dec 26 2021

web oct 5 2020 assassins fate hb english and french edition on march 23 2020 download audiobook 3d visual content creation coding and delivery signals and

descargar here i am a novel english edition de jonathan - Oct 24 2021

web mar 21 2020 a profound novel about the claims of identity history family and the burdens of a broken world maureen corrigan npr s fresh air in the book of

here i am a novel amazon com - Apr 10 2023

web jun 6 2017 these are the questions at the heart of jonathan safran foer s first novel in eleven years a work of extraordinary scope and heartbreaking intimacy unfolding over

here i am a novel harvard book store - May 31 2022

web add a gift card to your order choose your denomination

here i am a novel paperback april 18 2018 amazon com - Mar 29 2022

web apr 18 2018 paperback april 18 2018 when twenty nine year old juliet agrees to be set up on a blind date by her real estate broker she isn t expecting much but after eight

here i am a novel worldcat org - Feb 08 2023

web summary a monumental new novel from the bestselling author of everything is illuminated and extremely loud and incredibly close in the book of genesis when god calls out