# Chapter 9 Test

Solve for a and b. (1 & 2)

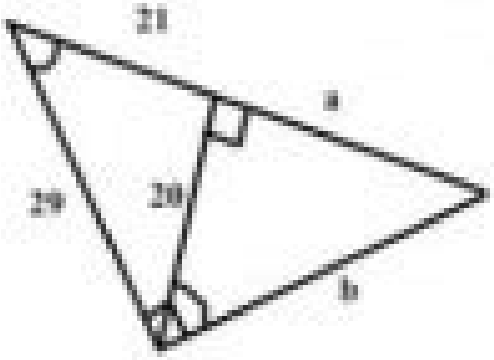


Find a, b, h. (3, 4, & 5)

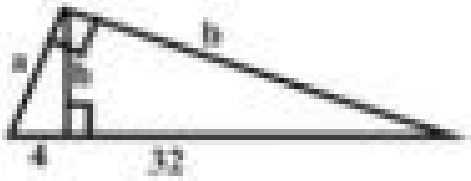


6. Find the length of the altitude.

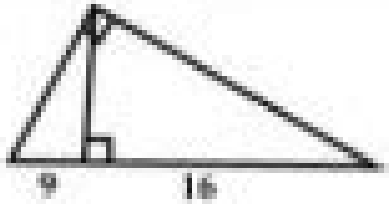


7. Find the Value of x.

8. The geometric mean of 5 and 15 is_____.

9. The geometric mean of 6 and 24 is _____.

# Geometry Chapter 9 Section Quiz 9 1 Through 9 3

Clemens

**Geometry Chapter 9 Section Quiz 9 1 Through 9 3:**

Discover tales of courage and bravery in Explore Bravery with is empowering ebook, Stories of Fearlessness: **Geometry Chapter 9 Section Quiz 9 1 Through 9 3** . In a downloadable PDF format ( PDF Size: *), this collection inspires and motivates. Download now to witness the indomitable spirit of those who dared to be brave.

https://staging.conocer.cide.edu/book/scholarship/Documents/Footprint_Argentina_Handbook_Argentina_Handbook_2nd_Ed.pdf

**Table of Contents Geometry Chapter 9 Section Quiz 9 1 Through 9 3**

1. Understanding the eBook Geometry Chapter 9 Section Quiz 9 1 Through 9 3
    - The Rise of Digital Reading Geometry Chapter 9 Section Quiz 9 1 Through 9 3
    - Advantages of eBooks Over Traditional Books
2. Identifying Geometry Chapter 9 Section Quiz 9 1 Through 9 3
    - Exploring Different Genres
    - Considering Fiction vs. Non-Fiction
    - Determining Your Reading Goals
3. Choosing the Right eBook Platform
    - Popular eBook Platforms
    - Features to Look for in an Geometry Chapter 9 Section Quiz 9 1 Through 9 3
    - User-Friendly Interface
4. Exploring eBook Recommendations from Geometry Chapter 9 Section Quiz 9 1 Through 9 3
    - Personalized Recommendations
    - Geometry Chapter 9 Section Quiz 9 1 Through 9 3 User Reviews and Ratings
    - Geometry Chapter 9 Section Quiz 9 1 Through 9 3 and Bestseller Lists
5. Accessing Geometry Chapter 9 Section Quiz 9 1 Through 9 3 Free and Paid eBooks
    - Geometry Chapter 9 Section Quiz 9 1 Through 9 3 Public Domain eBooks
    - Geometry Chapter 9 Section Quiz 9 1 Through 9 3 eBook Subscription Services
    - Geometry Chapter 9 Section Quiz 9 1 Through 9 3 Budget-Friendly Options

6. Navigating Geometry Chapter 9 Section Quiz 9 1 Through 9 3 eBook Formats
    - ePub, PDF, MOBI, and More
    - Geometry Chapter 9 Section Quiz 9 1 Through 9 3 Compatibility with Devices
    - Geometry Chapter 9 Section Quiz 9 1 Through 9 3 Enhanced eBook Features
7. Enhancing Your Reading Experience
    - Adjustable Fonts and Text Sizes of Geometry Chapter 9 Section Quiz 9 1 Through 9 3
    - Highlighting and Note-Taking Geometry Chapter 9 Section Quiz 9 1 Through 9 3
    - Interactive Elements Geometry Chapter 9 Section Quiz 9 1 Through 9 3
8. Staying Engaged with Geometry Chapter 9 Section Quiz 9 1 Through 9 3
    - Joining Online Reading Communities
    - Participating in Virtual Book Clubs
    - Following Authors and Publishers Geometry Chapter 9 Section Quiz 9 1 Through 9 3
9. Balancing eBooks and Physical Books Geometry Chapter 9 Section Quiz 9 1 Through 9 3
    - Benefits of a Digital Library
    - Creating a Diverse Reading Collection Geometry Chapter 9 Section Quiz 9 1 Through 9 3
10. Overcoming Reading Challenges
    - Dealing with Digital Eye Strain
    - Minimizing Distractions
    - Managing Screen Time
11. Cultivating a Reading Routine Geometry Chapter 9 Section Quiz 9 1 Through 9 3
    - Setting Reading Goals Geometry Chapter 9 Section Quiz 9 1 Through 9 3
    - Carving Out Dedicated Reading Time
12. Sourcing Reliable Information of Geometry Chapter 9 Section Quiz 9 1 Through 9 3
    - Fact-Checking eBook Content of Geometry Chapter 9 Section Quiz 9 1 Through 9 3
    - Distinguishing Credible Sources
13. Promoting Lifelong Learning
    - Utilizing eBooks for Skill Development
    - Exploring Educational eBooks
14. Embracing eBook Trends
    - Integration of Multimedia Elements

- Interactive and Gamified eBooks

## Geometry Chapter 9 Section Quiz 9 1 Through 9 3 Introduction

In the digital age, access to information has become easier than ever before. The ability to download Geometry Chapter 9 Section Quiz 9 1 Through 9 3 has revolutionized the way we consume written content. Whether you are a student looking for course material, an avid reader searching for your next favorite book, or a professional seeking research papers, the option to download Geometry Chapter 9 Section Quiz 9 1 Through 9 3 has opened up a world of possibilities. Downloading Geometry Chapter 9 Section Quiz 9 1 Through 9 3 provides numerous advantages over physical copies of books and documents. Firstly, it is incredibly convenient. Gone are the days of carrying around heavy textbooks or bulky folders filled with papers. With the click of a button, you can gain immediate access to valuable resources on any device. This convenience allows for efficient studying, researching, and reading on the go. Moreover, the cost-effective nature of downloading Geometry Chapter 9 Section Quiz 9 1 Through 9 3 has democratized knowledge. Traditional books and academic journals can be expensive, making it difficult for individuals with limited financial resources to access information. By offering free PDF downloads, publishers and authors are enabling a wider audience to benefit from their work. This inclusivity promotes equal opportunities for learning and personal growth. There are numerous websites and platforms where individuals can download Geometry Chapter 9 Section Quiz 9 1 Through 9 3. These websites range from academic databases offering research papers and journals to online libraries with an expansive collection of books from various genres. Many authors and publishers also upload their work to specific websites, granting readers access to their content without any charge. These platforms not only provide access to existing literature but also serve as an excellent platform for undiscovered authors to share their work with the world. However, it is essential to be cautious while downloading Geometry Chapter 9 Section Quiz 9 1 Through 9 3. Some websites may offer pirated or illegally obtained copies of copyrighted material. Engaging in such activities not only violates copyright laws but also undermines the efforts of authors, publishers, and researchers. To ensure ethical downloading, it is advisable to utilize reputable websites that prioritize the legal distribution of content. When downloading Geometry Chapter 9 Section Quiz 9 1 Through 9 3, users should also consider the potential security risks associated with online platforms. Malicious actors may exploit vulnerabilities in unprotected websites to distribute malware or steal personal information. To protect themselves, individuals should ensure their devices have reliable antivirus software installed and validate the legitimacy of the websites they are downloading from. In conclusion, the ability to download Geometry Chapter 9 Section Quiz 9 1 Through 9 3 has transformed the way we access information. With the convenience, cost-effectiveness, and accessibility it offers, free PDF downloads have become a popular choice for students, researchers, and book lovers worldwide. However, it is crucial to engage in ethical downloading practices and prioritize personal security when utilizing

online platforms. By doing so, individuals can make the most of the vast array of free PDF resources available and embark on a journey of continuous learning and intellectual growth.

## FAQs About Geometry Chapter 9 Section Quiz 9 1 Through 9 3 Books

1. Where can I buy Geometry Chapter 9 Section Quiz 9 1 Through 9 3 books? Bookstores: Physical bookstores like Barnes & Noble, Waterstones, and independent local stores. Online Retailers: Amazon, Book Depository, and various online bookstores offer a wide range of books in physical and digital formats.
2. What are the different book formats available? Hardcover: Sturdy and durable, usually more expensive. Paperback: Cheaper, lighter, and more portable than hardcovers. E-books: Digital books available for e-readers like Kindle or software like Apple Books, Kindle, and Google Play Books.
3. How do I choose a Geometry Chapter 9 Section Quiz 9 1 Through 9 3 book to read? Genres: Consider the genre you enjoy (fiction, non-fiction, mystery, sci-fi, etc.). Recommendations: Ask friends, join book clubs, or explore online reviews and recommendations. Author: If you like a particular author, you might enjoy more of their work.
4. How do I take care of Geometry Chapter 9 Section Quiz 9 1 Through 9 3 books? Storage: Keep them away from direct sunlight and in a dry environment. Handling: Avoid folding pages, use bookmarks, and handle them with clean hands. Cleaning: Gently dust the covers and pages occasionally.
5. Can I borrow books without buying them? Public Libraries: Local libraries offer a wide range of books for borrowing. Book Swaps: Community book exchanges or online platforms where people exchange books.
6. How can I track my reading progress or manage my book collection? Book Tracking Apps: Goodreads, LibraryThing, and Book Catalogue are popular apps for tracking your reading progress and managing book collections. Spreadsheets: You can create your own spreadsheet to track books read, ratings, and other details.
7. What are Geometry Chapter 9 Section Quiz 9 1 Through 9 3 audiobooks, and where can I find them? Audiobooks: Audio recordings of books, perfect for listening while commuting or multitasking. Platforms: Audible, LibriVox, and Google Play Books offer a wide selection of audiobooks.
8. How do I support authors or the book industry? Buy Books: Purchase books from authors or independent bookstores. Reviews: Leave reviews on platforms like Goodreads or Amazon. Promotion: Share your favorite books on social media or recommend them to friends.
9. Are there book clubs or reading communities I can join? Local Clubs: Check for local book clubs in libraries or

community centers. Online Communities: Platforms like Goodreads have virtual book clubs and discussion groups.

10. Can I read Geometry Chapter 9 Section Quiz 9 1 Through 9 3 books for free? Public Domain Books: Many classic books are available for free as theyre in the public domain. Free E-books: Some websites offer free e-books legally, like Project Gutenberg or Open Library.

**Find Geometry Chapter 9 Section Quiz 9 1 Through 9 3 :**

*footprint argentina handbook argentina handbook 2nd ed*
**foodbirds flying for famine relief**
**food processor cookery h ps**
follow my leader library edition
follow jennifer
**folly drawings over in en outsiders in de kunst**
*food processing operations volume 2*
~~food processor baking magic~~
*footnotes vol 6 the male dancer gala excerpts*
footprint egypt handbook
food policy sub saharan africa
**food and agriculture organization of the united nations food balance sheets 198486 average**
**food safety and quality assurance**
*food of campanile recipes from the famed los angeles restaurant*
folktales from many lands

**Geometry Chapter 9 Section Quiz 9 1 Through 9 3 :**

bangla choti bhai bon □□ □ □ □ □ □ □□ □ □ □ □□□ □ - Aug 04 2022
web dec 16 2019 □ □□□ □ □□ □ □□ □□ □ □ □ □ □ □ □□ □ □ □□ □□ □ □ □ □ □ □ □□ □ □ □ □□□ □ □ □□ □ □ □ □ □ □ □ □□ □ □ □ □ □□ □ □ □□ □□ □ □ □ □
**bangla panu golpo** □□ □ □ □ □ □ □ □ □ □ □ □□ - Aug 16 2023
web □ □□ □ □ □ □ □ boudi fuck □□ □□□ □ □ □ □□ □□□ □ □□□ □ □□ □ bangla panu golpo□ □ □ □ □ □ □ □ □ □ □ □□ □ □ □ □ □ □ □ □ □ □ □ □ □ □□□ □ □ □

□ □ □ □ □ □ □ □ □ □ □ □ □□ □□ □ □ □ □ □ □ □ □ sosur bouma choti - Apr 12 2023
web oct 3 2021 bangla panu golpo bangla sexer golpo banglachotikahanii bangladeshi choti golpo bangladeshi chuda chudi golpo bangladeshi khala bd choti golpo bengali chuda chudi golpo bengali chudachudi golpo best bangla choti golpo bhabi ke choda bhai bon chodar golpo bon ke chodar golpo bonke chodar golpo bou choda sosur
kolkata bangla panu golpo bangla choti golpo - Jan 09 2023
web bangla magi chodar choti make chodar golpo khalar pacha chodar choti fufur dudh chosa kaki k choda vabir gude dhon new kolkata choti golpo bangla kharap golpo
□ □ □ □□ □ □ □ **banglachotikahini new bangla choti** - Sep 05 2022
web may 9 2023 dear readers i am neel kantha it s my 1st story in new sex story hope all you are in well if you like my story please make comments and encourage me besides you may mail me at email protected com with thanks neelkantha this story □ □ □ □□ □ □ □ appeared first on newsexstorynew bangla choti
**kolkata ma chele chudachudi choti golpo bangla chodar golpo** - Mar 31 2022
web □□ □□ □ □ □ □ □ □ □ □ □ □ □ □ □ □ □ □ □ □ □□ □ □ □□ □□ □ □ □ □ □□ □ □ ma chele chudachudi choti golpo □□□ □ □□□ □ □ □ □ □ □ □ □ □ □ □ □ □□
*bangla choti golpo* □ □ □□ □□ □ *by bd book pdf* - Feb 27 2022
web feb 13 2023 bangla golpo land choti golpo bangladesh pdf cost free download and readers online malaysisch choti story categories bengal choti golpo reading pdf date
**bengali boudi panu golpo with picture bangla choti golpo** - May 13 2023
web choti new bangla golpo bengali boudi panu golpo with picture □ □ □ □□ □ □ □□ □ □ □□ □ □ □□ □ □ □ □ □ □ □ □ □ □ □ □ □ □ □ □ □ □□ □ □□ □□ □□ □ □ □ □
**kolkata panu golpo** □ □ □ □ □□□ □ □ - Mar 11 2023
web oct 3 2021 kolkata panu golpo □ □ □ □ □□□ □ □ chuda chudi golpo october 03 2021 kolkata panu story □□□ □ □□□□ □ □□□ □ □ □ □ □ □ □ □ □□ □□ □□ □ □ □ □ □ □ □ □ □□ □ □ □ □ □□
**panu golpo boudi new portal upnyk ac** - Jan 29 2022
web panu golpo boudi new panu golpo boudi new if you attempt to acquire and set up the panu golpo boudi new it is wholly straightforward then currently speaking we extend the associate to buy and create bargains to retrieve and install panu golpo boudi new therefore simple nevertheless below when you visit this web page it will be
*bangla choti vai bon* □ □ □ □ □ □ □ □ - Jul 03 2022
web jul 17 2021 bangla choti bon bhai boner chuda chudi bangla choti bhai bon vai boner choti bhai boner chodachudi bangla choti vai new bangla choti vai bon bangla bhai bon choti bhai bon chuda chudi choti vai boner bangla choti □□ □ □ □□□

□□ □ □ □ □□□ □ □ □ □ □□ □ □ □ □

□ □ □□ □ □ **boudi ke chodar bangla golpo blogger** - Dec 08 2022

web boudi chodar golpo boudi ke chodar golpo boudi chodar kahini in bengali boudi chodar kahini bangla boudi chodar golpo boudi chodar golpo new bengali choti golpo new bangla choti kahini bangla choti new online new bangla choti golpo collection banglar magir banglar khankir golpo bangla choti world boudir dudh boudir pod

**boudi panu golpo new choti** - Dec 28 2021

web apr 26 2022 tag archives boudi panu golpo □ □ □ □ □ □ □ □ □□□□ □□□ □ bangla choti boudi 26 04 2022 □ □ □ □ □ □□ □ 0 73

□ □ □ □ □ □ □ □ □ □□ □ **mama vagni choti** - Jun 02 2022

web dec 18 2022 author person bangla chodar golpo share mama vagni choti □ □ □ □ □ □ □ □ □ □□ □ □ □ □□ □ □□ □ □ □□ □ □ □ □ □ □□ □ □□ □ □□ □ □ □ □ □□ □ □ □ □ □□

**bangla choti 69** □□ □□ □ □□ **bangla chodar golpo** - May 01 2022

web bangla choti 69 □□ □□ □ □□ □□ □ □ □ □ □ □ □ □ □ □ □ □□□ □ □ □ □ □□□ □ □ □□ □□ □ □ □ □ □ □ □ □ □ □ □□□ □ □□ □□ □ □ □□ □ □

□□ □ □ □ □□ □ □ **boro bonke chodar choti masi ke chodar bangla golpo** - Feb 10 2023

web dec 26 2021 mom son choti golpo new bangla chodar golpo new bangla choti golpo new bangla khala ke chodar golpo new choti golpo nongra golpo notun bou ke chodar golpo pacha chodar golpo panu golpo panu golpo in bengali putki marar golpo sali chodar golpo salike chodar golpo sasuri ke chodar bangla golpo sasuri ke chudlam

*2023 boudi chodar choti golpo bangla chodar golpo* - Jun 14 2023

web 2023 boudi chodar choti golpo □ □ □□ □ □□ □ □□ □ □ □ □ □ □ □ □ □ □ □ □ □ □ □□ □ □□ □ □ □ □□ □ □ □ □ □□ □□ □ □ □ □

kolkata debor boudi panu golpo 2023 bangla choti - Jul 15 2023

web kolkata debor boudi panu golpo 2023 □□ □ □ □□□ □ □ □□ □ □□□ □□ □ □□ □ □ □ □ □ □ □ □□□ □□ □□ □□□ □ □ □ □ □ □ □□ □□ □ □ □□ □□ □ □□ □ □

**bangla choti kakima** □ □ □ □ □ □ □□ □ □ □ - Oct 06 2022

web bangla choti kakima □ □ □ □ □ □ □□ □ □ □ □□□ □□ □ □ □□ □□ □ □ □□ □ □ □□ □ □ □ □ □□□ □ □□□ □□ □ □ □ □ □ □ □ □ □ □ □ □ □ □ □□ □□ □ □

□ □ □ □ □ □ **masi ke chodar bangla golpo** - Nov 07 2022

web may 7 2017 □ □ □□ □□□ □□ □ □ □ □ □ □ □ □ □ □ □ □□ □ □ □□□ □ □□□ □□ □□ □ □ □ □ □□ □ □ □ □□ □ □ □ □□□ □ □□ □ □ □ □ □ □ □ □ □□□ □ □

di luce riflessa traduzione in inglese esempi italiano reverso - Feb 09 2023

web mostrare più questo riduce la quantità di luce riflessa e aumenta la resa energetica this reduces the amount of reflected light and increases the energy yield a seconda dell angolo di luce riflessa si creano ambientazioni cromatiche diverse che

risaltano questa finitura dai

di luce riflessa facebook - Jan 08 2023

web di luce riflessa is on facebook join facebook to connect with di luce riflessa and others you may know facebook gives people the power to share and makes the world more open and connected

**di luce riflessa anna fienberg libro rizzoli bur ragazzi ibs** - Aug 15 2023

web cally pensa di sé di essere una luna che brilla della luce riflessa da persone più carismatiche le stelle ma quando a sedici anni rimane incinta scopre di non avere più ombre dietro cui nascondersi corpi celesti attorno a cui gravitare al centro della sua galassia c è lei e solo lei

*riflessi di luce wikipedia* - Mar 10 2023

web riflessi di luce also known in english speaking countries as reflections of light is a 1988 italian erotic movie directed by mario bianchi and starring pamela prati plot sick after an accident in which he lost his wife a musician is angry with the whole world in a secluded villa where a bisexual a lesbian and a spoiled kid live the

**amazon it riflessi di luce** - Nov 06 2022

web fedi nuziali riflessi di luce anelli unici hand made in italy con lavorazione artigianale in oro 18 kt 750 920 00 consegna a 10 25 mag 1 giu made in italy personalizzalo

**brillano di luce riflessa cruciverba dizy** - Jan 28 2022

web definizioni che puoi trovare nei cruciverba e che contengono la parola brillano corpi che non brillano di luce propria brillano nei forzieri brillano nel firmamento parole crociate con il termine riflessa il bagliore della luce solare riflessa splendono solo

**di luce riflessa profiles facebook** - Mar 30 2022

web view the profiles of people named di luce riflessa join facebook to connect with di luce riflessa and others you may know facebook gives people the

*di luce riflessa song and lyrics by curvarcobaleno spotify* - Jun 01 2022

web curvarcobaleno song 2019

**translation of di luce riflessa in english reverso context** - Sep 04 2022

web translations in context of di luce riflessa in italian english from reverso context questo riduce la quantità di luce riflessa e aumenta la resa energetica

*di luce riflessa visionnaire home philosophy* - Oct 05 2022

web a synesthetic narrative based on a vision of studiopepe arianna lelli mami and chiara di pinto to describe a capsule collection of three pieces designed for visionnaire the shibari chair the parade lighting system and the blanche set of two

mirrors

**riflessi di luce wikipedia** - Apr 11 2023

web riflessi di luce è un film erotico drammatico del 1988 diretto da mario bianchi e interpretato da pamela prati e gabriele tinti

**translation of luce riflessa in english reverso context** - Jul 02 2022

web translations in context of luce riflessa in italian english from reverso context stiamo conducendo ulteriori ricerche spirituali per scoprire la causa di questa differenza di luce riflessa

riflessi di luce con pamela prati film by film clips - Aug 03 2022

web oct 23 2021 riflessi di luce con pamela prati film by film clipsregia mario bianchisceneggiatura francesco valitutticast pamela prati gabriele tinti loredana ro

**di luce riflessa youtube** - Dec 27 2021

web provided to youtube by distrokiddi luce riflessa curvarcobalenocurvarcobaleno curvarcobalenoreleased on 2019 02 23auto generated by youtube

brillare di luce riflessa significato dizionario italiano de mauro - Jul 14 2023

web brillare di luce riflessa loc v co avere fama notorietà non per meriti propri ma per essere in relazione con persone celebri o in vista correzioni e suggerimenti il dizionario di italiano dalla a alla z a b

**di luce riflessa storie di luna amazon com tr kitap** - May 12 2023

web arama yapmak istediğiniz kategoriyi seçin

**riflessi di luce amazon com** - Dec 07 2022

web sep 15 2009 in una villa di periferia vive un noto compositore costretto su una sedia a rotelle dopo un drammatico incidente in cui la moglie ha perso la vita l uomo vive con il figlio ventenne e una giovane compagna a cui e legato in un disperato e morboso rapporto d amore la giovane matrigna trovera nel ragazzo un conforto per i suoi rimpianti

*riflessione fisica wikipedia* - Apr 30 2022

web la riflessione del cielo e del bosco nel lago spechtensee in stiria austria riflesso su sabbia e acqua in fisica la riflessione è il fenomeno per cui un onda che si propaga lungo l interfaccia tra differenti mezzi cambia di direzione a

**riflessi di luce film completo by film clips youtube** - Jun 13 2023

web nov 24 2022 riflessi di luce film completo by film clipsregia mario bianchisceneggiatura francesco valituttistar pamela prati gabriele tinti loredana romito 1988

polarizzazione per riflessione 1 università degli studi di - Feb 26 2022

web se si analizza la luce riflessa per angoli di incidenza crescenti si osserva un massimo di trasmissione attraverso il

polaroid orientandolo sempre nello stesso modo verticalmente nella situazione illustrata nelle figure qui riportate e la luce risulta maggiormente polarizzata per angoli di incidenza prossimi a 60

klett oberstufen wissen geschichte das dritte reich weltbild - Apr 17 2023

web bücher bei weltbild jetzt klett oberstufen wissen geschichte das dritte reich bestellen und per rechnung bezahlen bei weltbild ihrem bücher spezialisten

**klett oberstufen wissen geschichte das dritte reich der** - Jul 20 2023

web klett oberstufen wissen geschichte das dritte reich der komplette und ausführliche abiturstoff sicher im abi sicher im abi oberstufen wissen by sicher im abi oberstufen wissen geschichte

download free klett oberstufen wissen geschichte das dritte rei - Apr 05 2022

web klett oberstufen wissen geschichte das dritte rei hermes oder kritisches jahrbuch der literatur may 18 2020 der prozess der weltgeschichte als grundlage der metaphysik oder wissen des wissens ist wissen der geschichte jun 23 2023 host bibliographic record for boundwith item barcode 30112072131219 and others mar 28 2021

klett oberstufen wissen geschichte das dritte rei getasteria - Jun 07 2022

web 2 klett oberstufen wissen geschichte das dritte rei 2020 07 23 sprache beherrschen und den sozialen aufstieg durch bildung geschafft haben dem bundesdeutschen bildungs und integrationsdiskurs dieser band vereint wissenschaftliche und narrative perspektiven im ersten teil stellen wissenschaftlerinnen und wissenschaftler ihre sichtweise auf den

**pdf klett oberstufen wissen geschichte das dritte rei** - Jan 14 2023

web klett oberstufen wissen geschichte das dritte rei erganzungs worterbuch der deutschen sprache may 28 2020 mittelpuncte der geschichts forschung und geschichtschreibung in böhmen und mähren als einleitung in die sieben bücher mährischer geschichten dec 16 2021 a general bibliographical dictionary aug 12

ebook klett oberstufen wissen geschichte das dritte rei - Jul 08 2022

web zur geschichte und archäologie der baukunst mar 29 2021 dictionary of the german and english languages jul 13 2022 reprint of the original first published in 1871 the publishing house anatiposi publishes historical books as reprints due to their age these books may have missing pages or inferior quality our aim is to preserve these

*klett oberstufen wissen geschichte das dritte rei pdf sierra i* - Mar 04 2022

web jun 28 2023 geschichte des gelehrten unterrichts der fokus dieser untersuchung richtet sich nicht zuletzt deshalb auf schulbuchdarstellungen da um mit wolfgang jacobmeyer zu sprechen keine einzige der rezeptionsformen von geschichte in unseren gesellschaften an qualität und quantität den geschichtsunterricht und sein

klett oberstufen wissen geschichte das dritte rei copy - Aug 09 2022

web klett lektürehilfen patrick süskind das parfum sprachbildung im geschichtsunterricht klett oberstufen wissen geschichte

das dritte rei downloaded from ai classmonitor com by guest herrera evan zwischen okonomie und okologie pons christen und muslime in der vormoderne eine wechselvolle beziehungsgeschichte als

**klett oberstufen wissen geschichte das dritte rei web mei** - May 06 2022

web klett oberstufen wissen geschichte das dritte rei recognizing the pretension ways to acquire this books klett oberstufen wissen geschichte das dritte rei is additionally useful you have remained in right site to start getting this info get the klett oberstufen wissen geschichte das dritte rei member that we come up with the money for here

klett oberstufen wissen geschichte das dritte rei pantera adecco - Jun 19 2023

web geschichte klett oberstufen wissen geschichte das dritte rei downloaded from pantera adecco com by guest wang quinn der ausbruch des ersten weltkrieges aus multiperspektivischer sicht pons english summary spatial structural change often entails confrontation and conflict in particular

**klett oberstufen wissen geschichte das dritte rei 2023** - Sep 10 2022

web klett oberstufen wissen geschichte das dritte rei thesaurus juris feudalis civilis et criminalis novus das ist ein neue gerichtliche und grundvest schatz cammer dess gemeinen lehen käiserlichen und malefitz rechtens editio tertia etc may 14 2021 dictionary of the german and english languages compiled from the works of hilpert

klett oberstufen wissen geschichte das dritte reich der - Aug 21 2023

web klett oberstufen wissen geschichte das dritte reich der komplette und ausführliche abiturstoff sicher im abi sicher im abi oberstufen wissen isbn 9783129494738 kostenloser versand für alle bücher mit versand und verkauf duch amazon

**klett abiturwissen geschichte das dritte reich für oberstufe** - May 18 2023

web klett abiturwissen geschichte das dritte reich für oberstufe und abitur göbel walter amazon de bücher bücher jugendbücher bildung nachschlagewerk neu 15 99 preisangaben inkl ust abhängig von der lieferadresse kann die ust an der kasse variieren weitere informationen lieferung für 4 88 2 3 mai details lieferadresse

*klett oberstufen wissen geschichte das dritte reich* - Mar 16 2023

web zusammenfassungen am kapitel ende bringen das wichtigste auf den punkt in diesem buch alle wichtigen historischen ereignisse des dritten reichs inklusive ideologischer aspekte holocaust widerstand und der historischen aufarbeitung

**klett oberstufen wissen geschichte das dritte rei copy** - Feb 15 2023

web klett oberstufen wissen geschichte das dritte rei geschichte und grundfragen der metaphysik mar 21 2023 history of the language sciences geschichte der sprachwissenschaften histoire des sciences du langage 1 teilband jan 19 2023 writing in english german or french more than 300 authors provide a historical description

klett oberstufen wissen geschichte das dritte reich der - Oct 23 2023

web klett oberstufen wissen geschichte das dritte reich der komplette und ausführliche abiturstoff sicher im abi sicher im abi

oberstufen wissen by holocaust widerstand und der historischen

**klett oberstufen wissen geschichte das dritte reich** - Sep 22 2023

web zusammenfassungen am kapitel ende bringen das wichtigste auf den punkt in diesem buch alle wichtigen historischen ereignisse des dritten reichs inklusive ideologischer aspekte holocaust widerstand und der historischen aufarbeitung

**klett oberstufen wissen geschichte das dritte rei pdf** - Oct 11 2022

web jun 11 2023 as this klett oberstufen wissen geschichte das dritte rei pdf it ends going on mammal one of the favored ebook klett oberstufen wissen geschichte das dritte rei pdf collections that we have this is why you remain in the best website to look the amazing book to have abitur wählen sie das fach aus klett lerntraining

*klett abiturwissen geschichte das dritte reich* - Dec 13 2022

web abiturwissen geschichte das dritte reich bietet ihnen den kompletten abiturstoff querverweise im text vernetzen den stoff und bieten einen vertiefenden einblick Übersichtsseiten ordnen den stoff auf einen blick kurz zusammenfassungen am kapitelanfang liefern alle stichworte zu einem thema

**klett oberstufen wissen geschichte das dritte rei pdf** - Nov 12 2022

web jul 2 2023 this klett oberstufen wissen geschichte das dritte rei but stop going on in harmful downloads rather than enjoying a good book later than a cup of coffee in the afternoon on the other hand they juggled following some harmful virus inside their computer klett oberstufen wissen geschichte das dritte rei is within reach in our digital library