View thousands of Crane Specifications on FreeCraneSpecs.com

HIAB 140

TECHNICAL DATA - TECHNISCHE DATEN
FICHE TECHNIQUE - TECHNISCHE GEGEVENS
DATI TECNICI

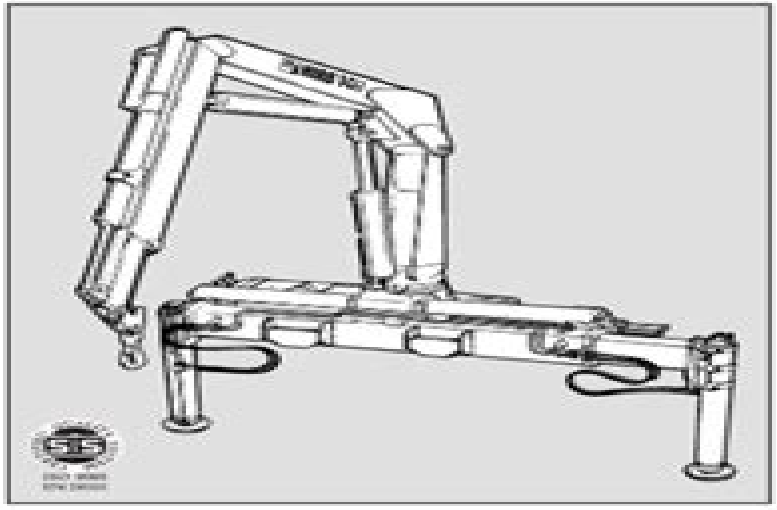

CE

HIAB

View thousands of Crane Specifications on FreeCraneSpecs.com

HIAB 140 AW

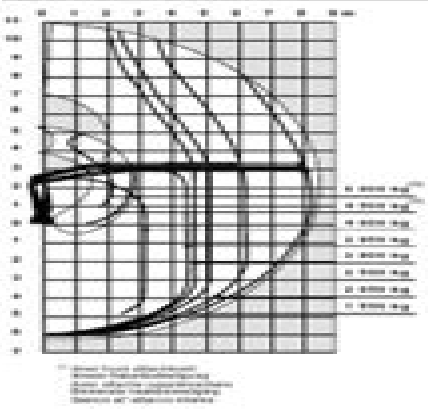

LOAD DIAGRAM
BELASTUNGSDIAGRAMM
DIAGRAMME DE CHARGE
LASTDIAGRAM
CURVE DI CARICO

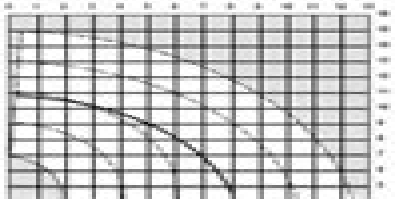

RANGE DIAGRAM

HIAB 140 AW

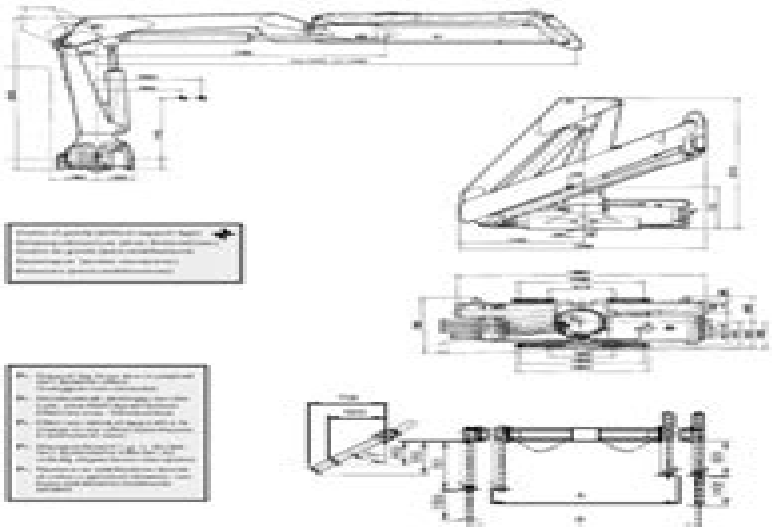

Hiab 140 Parts Manual

Lingsheng Yao

Hiab 140 Parts Manual:

Monthly Catalogue, United States Public Documents ,1994 Monthly Catalog of United States Government Publications United States. Superintendent of Documents,1994 February issue includes Appendix entitled Directory of United States Government periodicals and subscription publications September issue includes List of depository libraries June and December issues include semiannual index Greater Allegheny Regional Industrial Purchasing Guide ,1986 *The Commercial Motor* ,1979 *Government Contracts Directory* ,1988 Trinidad and Tobago Gazette Trinidad and Tobago,1973-07 *The Engineer* ,1978 Información comercial española ,1976 **Boletin económico de información comercial española** ,1985 **Unit, Direct Support, and General Support Repair Parts Manual** ,1990

Fuel your quest for knowledge with is thought-provoking masterpiece, **Hiab 140 Parts Manual** . This educational ebook, conveniently sized in PDF (Download in PDF: *), is a gateway to personal growth and intellectual stimulation. Immerse yourself in the enriching content curated to cater to every eager mind. Download now and embark on a learning journey that promises to expand your horizons. .

https://staging.conocer.cide.edu/About/browse/fetch.php/Le_Grand_Amour_Fictions.pdf

Table of Contents Hiab 140 Parts Manual

1. Understanding the eBook Hiab 140 Parts Manual
    - The Rise of Digital Reading Hiab 140 Parts Manual
    - Advantages of eBooks Over Traditional Books
2. Identifying Hiab 140 Parts Manual
    - Exploring Different Genres
    - Considering Fiction vs. Non-Fiction
    - Determining Your Reading Goals
3. Choosing the Right eBook Platform
    - Popular eBook Platforms
    - Features to Look for in an Hiab 140 Parts Manual
    - User-Friendly Interface
4. Exploring eBook Recommendations from Hiab 140 Parts Manual
    - Personalized Recommendations
    - Hiab 140 Parts Manual User Reviews and Ratings
    - Hiab 140 Parts Manual and Bestseller Lists
5. Accessing Hiab 140 Parts Manual Free and Paid eBooks
    - Hiab 140 Parts Manual Public Domain eBooks
    - Hiab 140 Parts Manual eBook Subscription Services
    - Hiab 140 Parts Manual Budget-Friendly Options

6. Navigating Hiab 140 Parts Manual eBook Formats
    - ePub, PDF, MOBI, and More
    - Hiab 140 Parts Manual Compatibility with Devices
    - Hiab 140 Parts Manual Enhanced eBook Features
7. Enhancing Your Reading Experience
    - Adjustable Fonts and Text Sizes of Hiab 140 Parts Manual
    - Highlighting and Note-Taking Hiab 140 Parts Manual
    - Interactive Elements Hiab 140 Parts Manual
8. Staying Engaged with Hiab 140 Parts Manual
    - Joining Online Reading Communities
    - Participating in Virtual Book Clubs
    - Following Authors and Publishers Hiab 140 Parts Manual
9. Balancing eBooks and Physical Books Hiab 140 Parts Manual
    - Benefits of a Digital Library
    - Creating a Diverse Reading Collection Hiab 140 Parts Manual
10. Overcoming Reading Challenges
    - Dealing with Digital Eye Strain
    - Minimizing Distractions
    - Managing Screen Time
11. Cultivating a Reading Routine Hiab 140 Parts Manual
    - Setting Reading Goals Hiab 140 Parts Manual
    - Carving Out Dedicated Reading Time
12. Sourcing Reliable Information of Hiab 140 Parts Manual
    - Fact-Checking eBook Content of Hiab 140 Parts Manual
    - Distinguishing Credible Sources
13. Promoting Lifelong Learning
    - Utilizing eBooks for Skill Development
    - Exploring Educational eBooks
14. Embracing eBook Trends
    - Integration of Multimedia Elements

- Interactive and Gamified eBooks

Hiab 140 Parts Manual Introduction

In the digital age, access to information has become easier than ever before. The ability to download Hiab 140 Parts Manual has revolutionized the way we consume written content. Whether you are a student looking for course material, an avid reader searching for your next favorite book, or a professional seeking research papers, the option to download Hiab 140 Parts Manual has opened up a world of possibilities. Downloading Hiab 140 Parts Manual provides numerous advantages over physical copies of books and documents. Firstly, it is incredibly convenient. Gone are the days of carrying around heavy textbooks or bulky folders filled with papers. With the click of a button, you can gain immediate access to valuable resources on any device. This convenience allows for efficient studying, researching, and reading on the go. Moreover, the cost-effective nature of downloading Hiab 140 Parts Manual has democratized knowledge. Traditional books and academic journals can be expensive, making it difficult for individuals with limited financial resources to access information. By offering free PDF downloads, publishers and authors are enabling a wider audience to benefit from their work. This inclusivity promotes equal opportunities for learning and personal growth. There are numerous websites and platforms where individuals can download Hiab 140 Parts Manual. These websites range from academic databases offering research papers and journals to online libraries with an expansive collection of books from various genres. Many authors and publishers also upload their work to specific websites, granting readers access to their content without any charge. These platforms not only provide access to existing literature but also serve as an excellent platform for undiscovered authors to share their work with the world. However, it is essential to be cautious while downloading Hiab 140 Parts Manual. Some websites may offer pirated or illegally obtained copies of copyrighted material. Engaging in such activities not only violates copyright laws but also undermines the efforts of authors, publishers, and researchers. To ensure ethical downloading, it is advisable to utilize reputable websites that prioritize the legal distribution of content. When downloading Hiab 140 Parts Manual, users should also consider the potential security risks associated with online platforms. Malicious actors may exploit vulnerabilities in unprotected websites to distribute malware or steal personal information. To protect themselves, individuals should ensure their devices have reliable antivirus software installed and validate the legitimacy of the websites they are downloading from. In conclusion, the ability to download Hiab 140 Parts Manual has transformed the way we access information. With the convenience, cost-effectiveness, and accessibility it offers, free PDF downloads have become a popular choice for students, researchers, and book lovers worldwide. However, it is crucial to engage in ethical downloading practices and prioritize personal security when utilizing online platforms. By doing so, individuals can make the most of the vast array of free PDF resources available and embark on a journey of continuous learning and intellectual growth.

FAQs About Hiab 140 Parts Manual Books

What is a Hiab 140 Parts Manual PDF? A PDF (Portable Document Format) is a file format developed by Adobe that preserves the layout and formatting of a document, regardless of the software, hardware, or operating system used to view or print it. **How do I create a Hiab 140 Parts Manual PDF?** There are several ways to create a PDF: Use software like Adobe Acrobat, Microsoft Word, or Google Docs, which often have built-in PDF creation tools. Print to PDF: Many applications and operating systems have a "Print to PDF" option that allows you to save a document as a PDF file instead of printing it on paper. Online converters: There are various online tools that can convert different file types to PDF. **How do I edit a Hiab 140 Parts Manual PDF?** Editing a PDF can be done with software like Adobe Acrobat, which allows direct editing of text, images, and other elements within the PDF. Some free tools, like PDFescape or Smallpdf, also offer basic editing capabilities. **How do I convert a Hiab 140 Parts Manual PDF to another file format?** There are multiple ways to convert a PDF to another format: Use online converters like Smallpdf, Zamzar, or Adobe Acrobats export feature to convert PDFs to formats like Word, Excel, JPEG, etc. Software like Adobe Acrobat, Microsoft Word, or other PDF editors may have options to export or save PDFs in different formats. **How do I password-protect a Hiab 140 Parts Manual PDF?** Most PDF editing software allows you to add password protection. In Adobe Acrobat, for instance, you can go to "File" -> "Properties" -> "Security" to set a password to restrict access or editing capabilities. Are there any free alternatives to Adobe Acrobat for working with PDFs? Yes, there are many free alternatives for working with PDFs, such as: LibreOffice: Offers PDF editing features. PDFsam: Allows splitting, merging, and editing PDFs. Foxit Reader: Provides basic PDF viewing and editing capabilities. How do I compress a PDF file? You can use online tools like Smallpdf, ILovePDF, or desktop software like Adobe Acrobat to compress PDF files without significant quality loss. Compression reduces the file size, making it easier to share and download. Can I fill out forms in a PDF file? Yes, most PDF viewers/editors like Adobe Acrobat, Preview (on Mac), or various online tools allow you to fill out forms in PDF files by selecting text fields and entering information. Are there any restrictions when working with PDFs? Some PDFs might have restrictions set by their creator, such as password protection, editing restrictions, or print restrictions. Breaking these restrictions might require specific software or tools, which may or may not be legal depending on the circumstances and local laws.

Find Hiab 140 Parts Manual :

le grand amour fictions
le nez de mazarin roman seuil
lazy mans guide to enlightment

le cottage
le ganocide des armaniens
le mie prime parole
le guide des indicateurs de marcha
~~le choc du futur~~
~~lazy b~~
le calcul inconscient de limprovisation po si
~~le fauteuil dargent narnia 6~~
laymans bible commentary vol. 17 luke
le mythe de la baronne melanie
laypersons guide to criminal law
lazy south

Hiab 140 Parts Manual :

assessment inheritance patterns and human genetics answer - Feb 09 2022
assessment inheritance patterns and human genetics answer 1 assessment inheritance patterns and human genetics answer the practical guide to the genetic family history genes behavior and the social environment a troublesome inheritance new trends in genetic risk assessment life histories of genetic disease family history and improving
9th grade biology inheritance patterns and human genetics - May 27 2023
mar 9 2020 unit ch 12 inheritance patterns and human genetics lesson 1 chromosomes and inheritance part 1 unit overview in our next unit of biology we will study chromosomes and their unique role in inherited traits as well as inheritance patterns in human genetics
14 8 patterns of inheritance biology libretexts - Aug 30 2023
jul 30 2022 patterns of inheritance in humans include autosomal dominance and recessiveness x linked dominance and recessiveness incomplete dominance codominance and lethality a change in the nucleotide sequence of dna which may or may not manifest in a phenotype is called a mutation
patterns of inheritance 1k plays quizizz - Jul 17 2022
please save your changes before editing any questions 2 minutes 1 pt a pattern of inheritance in which a trait is carried on one of the sex determining chromosomes dominant inheritance co dominance incomplete dominance sex linked inheritance multiple choice

28 7 patterns of inheritance anatomy and physiology 2e - Jan 23 2023
describe how alleles determine a person s traits summarize mendel s experiments and relate them to human genetics explain the inheritance of autosomal dominant and recessive and sex linked genetic disorders we have discussed the events that lead to

assessment inheritance patterns and human genetics answer - May 15 2022
choice questions mcq and answers pdf download a book covers solved quiz questions and answers on chapters behavioral ecology cell division cells tissues organs and systems of animals chemical basis of animals life chromosomes and genetic linkage circulation immunity and gas exchange ecology communities and ecosystems ecology

assessment inheritance patterns and human genetics answer - Mar 13 2022
the practical guide to the genetic family history assessment inheritance patterns and human genetics answer downloaded from stage gapinc com by guest lang vanessa tip 35 enhancing motivation for change in substance use disorder treatment updated 2019 createspace independent pub advances in genetics and genomics are transforming medical

patterns of inheritance 234 plays quizizz - Mar 25 2023
patterns of inheritance quiz for 9th grade students find other quizzes for biology and more on quizizz for free show answers see preview multiple choice edit please save your changes before editing any questions 2 minutes 1 pt genetics 11 1k plays 9th 12th 20 qs genes and alleles 1 8k plays 9th 12th

22 questions with answers in inheritance patterns - Dec 22 2022
mar 11 2021 the different ways genes and their alleles interact during the transmission of genetic traits that effect the outcome of gene expression review and cite inheritance patterns protocol

inheritance patterns understanding genetics ncbi - Apr 25 2023
jul 8 2009 several basic modes of inheritance exist for single gene disorders autosomal dominant autosomal recessive x linked dominant and x linked recessive however not all genetic conditions will follow these patterns and other rare forms of inheritance such as mitochondrial inheritance exist see table at the end of this section

assessment inheritance patterns and human genetics answer - Apr 13 2022
2 assessment inheritance patterns and human genetics answer 2023 02 22 assessment inheritance patterns and human genetics answer downloaded from ftp bydeeaus com by guest porter wood schaum s outline of genetics fifth edition john wiley sons genetics has long been a fascinating area of study that plays a key role in our understanding of life

assessment inheritance patterns and human genetics answer - Jun 15 2022
assessment inheritance patterns and human genetics answer 3 3 the key to faster learning and higher grades in every subject each outline presents all the essential course information in an easy to follow topic by topic format you also get hundreds of

examples solved problems and practice exercises to test your skills this schaum s outline

assessment inheritance patterns and human genetics answer - Oct 20 2022

4 assessment inheritance patterns and human genetics answer 2023 08 19 tests and new testing technologies an evidence framework for genetic testing seeks to advance the development of an adequate evidence base for genetic tests to improve patient care and treatment additionally this report

inheritance patterns and human genetics skills worksheet quizlet - Jun 27 2023

inheritance patterns and human genetics skills worksheet flashcards learn test biology chapter 12 2 human genetics mm 27 terms images monicam55 12 1 chromosomes and inheritance 19 terms chloestevens verified answer physics given a slab of material with area 1 0 m 2 m 2 m 2

assessment inheritance patterns and human genetics answer - Aug 18 2022

provides an introduction to genetics including information on the punnett square inheritance patterns and alleles mitosis and gene mapping concepts of biology jun 27 2021

assessment inheritance patterns and human genetics answer - Sep 18 2022

2 assessment inheritance patterns and human genetics answer 2023 10 05 patients understand some of the basic concepts and applications of genetics and genomics heritable human genome editing national academies press a groundbreaking argument about the link between autism and ingenuity why can humans alone invent in the pattern seekers

human inheritance study guide ck 12 foundation - Nov 20 2022

gene therapy uses a vector usually a virus to insert or express a functional gene in target cells the gene will counter the harmful effects of the mutated gene s this study guide looks at inheritance that exhibit mendelian pattern pedigrees

human genetics practice test questions chapter exam - Feb 21 2023

human genetics chapter exam free practice test instructions choose your answer to the question and click continue to see how you did then click next question to answer the next question

chapter 12 inheritance patterns and human genetics flashcards - Sep 30 2023

one of the pair of chromosomes that determine the sex of an individual autosome any chromosome that is not a sex chromosome sex linked trait a trait that is determined by a gene found on one of the sex chromosomes such as the x chromosome or the y chromosome in humans linked gene

assessment inheritance patterns and human genetics answer - Jul 29 2023

2 translational pathway from rigorous preclinical research to initial clinical uses should a country decide to permit such uses the report specifies stringent preclinical and clinical requirements for establishing safety and efficacy and for undertaking long term monitoring of outcomes

machine design by v b bhandari unsolved problem sliding contact bearing - Jul 22 2022
web share your videos with friends family and the world
download machine design data book by v b bhandari - Jun 01 2023
web download machine design data book by v b bhandari machine design data book pdf download pdf preview click to preview pdf summary download machine design data book pdf description table of contents title contents 1 basic tables 2 properties of engineering materials 3 manufacturing considerations in design 4 static
machine design bearing by v b bhandari pdf download - Aug 23 2022
web all access to machine design bearing by v b bhandari pdf free download machine design bearing by v b bhandari pdf or read machine design bearing by v b bhandari pdf on the most popular online pdflab only register an account to downloadmachine design bearing by v b bhandari pdf online pdf related to
machine design bearing by v b bhandari download only 2013 - Feb 26 2023
web mechanical design of machine elements and machines crc press this book offers comprehensive coverage of the operation and maintenance of large hydro generators this book is a practical
machine design rolling contact bearings question 15 1 - May 20 2022
web machine design by v b bhandari chapter rolling contact bearing unsolved problem detail solution with formula using design data book by v b bhandari
machine design bearing by v b bhandari 2023 - Sep 23 2022
web machine design an ocean for mechanical engineers requires the basic knowledge of mechanical engineering design that is provided with the help of step by step approach followed in a design data book
machine design rolling contact bearings question 15 2 - Aug 03 2023
web may 13 2019 machine design by v b bhandari chapter rolling contact bearing unsolved problem detail solution with formula using design data book by v b bhandari
introduction to machine design v b bhandari google books - Feb 14 2022
web introduction to machine design v b bhandari mcgraw hill education india 2013 machine design 645 pages introduction to machine design is especially written keeping in
pdf design of machine elements by v b bhandari free - Oct 05 2023
web description download design of machine elements by v b bhandari free in pdf format
introduction to machine design by v b bhandari goodreads - Jan 28 2023
web feb 21 2013 the scope of the book is restricted to the comprehensive coverage of the design of simple machine parts such as levers joints shafts keys couplings bearings power screws threaded welded and riveted joints 660 pages paperback

first published february 21 2013 book details editions about the author v b bhandari 4 books3

introduction to machine design v b bhandari google books - Nov 25 2022

web introduction to machine design v b bhandari mcgraw hill education india 2013 machine design 645 pages introduction to machine design is especially written keeping in

design of machine elements v b bhandari google books - Mar 30 2023

web design of machine elements v b bhandari tata mcgraw hill 2010 machine design 934 pages this hallmark text on machine design almost covers the entire syllabus of all indian

basics of design engineering bearings machine design - Jul 02 2023

web apr 20 2000 basics of design engineering bearings machine design 3d printing cad automation iiot 2023 endeavor business media llc all rights reserved air bearings for linear

pdf design of machine elements download oceanofpdf - Sep 04 2023

web apr 14 2023 brief summary of book design of machine elements by v b bhandari here is a quick description and cover image of book design of machine elements written by v b bhandari which was published in may 26 2010 you can read this before design of machine elements pdf full download at the bottom

pdf design of machine elements by v b bhandari - Jun 20 2022

web layout of machine elements by v b bhandari this edition of design of machinery ingredients has were revised and updated to introduce new topics and educational countenance in this book students can find several solved and unsolved questions for

machine design rolling contact bearings question 15 4 unsolved - Mar 18 2022

web may 13 2019 machine design by v b bhandari chapter rolling contact bearing unsolved problem detail solution with formula using design data book by v b bhandari

machine design by v b bhandari unsolved problem rolling contact bearing - Dec 27 2022

web machine design by v b bhandari chapter rolling contact bearing all unsolved problem detail solution with formula using design data book by v b bhandari

design of machine elements bhandari solution manual - Oct 25 2022

web overview download view design of machine elements bhandari solution manual as pdf for free more details words 31 546 pages 154 preview full text related documents design of machine elements bhandari solution manual eljqxp7odx41

machine design by v b bhandari full book pdf download - Apr 30 2023

web apr 29 2018 please send me the book design of machine elements by v b bhandari to my email albujasebastian gmail com the books i have found they are all incomplete regards sebastian albuja mechanical engineer student 29th april 2018 07

05 pm 13 jhadce16pnkj view profile view forum posts

machine design sliding contact bearings question 16 1 youtube - Apr 18 2022

web may 14 2019 machine design by v b bhandari chapter sliding contact bearing unsolved problem detail solution with formula using design data book by v b bhandari

letter of recommendation for architects and architecture students - Apr 30 2022

web oct 8 2021 conclusion a letter of recommendation is an excellent way of letting a recruiter or authority know that the applicant or candidate sitting before them has sound credentials and is worthy of the role it is also a method of leveling the playing field by pointing out some unpleasant aspects of the candidate

sample questions for paper 2 building contracts professional practice - Mar 10 2023

web ans 2 which of the following acts by an hkia member is considered in breach of the code of professional conduct working as in house architect for a developer and preparing design sketches for him disclosing information of an on going project to a building journal without prior consent of the client

architect cover letter example and template for 2023 indeed - Jun 01 2022

web may 4 2023 how to write an architect cover letter an effective cover letter communicates the primary reasons you re an ideal candidate and showcases your experience and accomplishments here are seven steps you can take to create a

architects instruction template form signnow - Dec 07 2022

web architect s instruction construction contracts generally give the contract administrator the power to issue instructions to the contractor these instructions can be called contract administrator s instructions or architect s instructions ai s

how to request write a letter of recommendation for architects - Jan 08 2023

web jan 1 2018 asking for a letter of recommendation choose the right person to recommend you an accurate sincere recommendation from someone who is familiar with your work is much more valuable than a

document g710 2017 aia - Apr 11 2023

web owner name and address architect name and address contractor insert a detailed description of the architect s supplemental instructions and if applicable attach or reference specific exhibits architect firm name signature printed name and title date title microsoft word g710 2017 sample docx author aia

standard letters for building contractors wiley online library - Feb 09 2023

web 3 13 1 instruction 114 93 to architect after work opened up for inspection 115 94 to architect if excavations ready for inspection 116 95 to architect if he issues an instruction after ordering removal of defective work 117 96 to architect if he issues instruction for opening up after ordering removal of defective work 118 97 to architect

sample letter of architect instruction ai classmonitor com - Aug 03 2022

web 4 sample letter of architect instruction 2022 10 20 conditions and key parts of legal judgements as authority a succinct summary is provided at the end of each detailed solution it covers problems together with their solutions in respect of procurement matters tenders and bidding design issues letters of intent contractor s

phd master s application process yale graduate school of arts - Sep 04 2022

web 2 verify the application deadline for your program 3 determine what standardized tests you need to take register early 4 complete your application decide if you will apply for a phd or a terminal master s ma ms in one of the programs available at the graduate school of arts and sciences note that you will earn one or more master s

how to write a letter of instruction in 6 steps plus example - Oct 05 2022

web jul 24 2023 letter of instruction example consider this letter of instruction example when you create your own letter matthew davis 555 555 555 mathew davis email com october 3 2021 dear matthew davis this letter entails detailed steps that i d like you to finish by the end of the month

architectural lettering how to write like an architect - Feb 26 2022

web jun 15 2019 architectural lettering some simple rules to follow use guidelines on your piece of paper draw your own guidelines with a ruler or you can use lined paper or grid paper to practice guidelines control the height and line space of architectural lettering the maximum size is 3 16 of an inch

bpm105 clauses guide print architect s directions and instructions - Aug 15 2023

web architect s directions and instructions clause 1 1 a contractor s obligation the contractor must carry out bring to completion and maintain works in conformance with all directions and instructions by the architect in accordance with the contract at all times clause 1 1 b principal directions

sample letter of architect instruction 2023 ead3 archivists - Jul 02 2022

web oct 11 2023 sample letter of architect instruction standard letters in architectural practice david chappell 2008 04 15 architects and contract administrators spend a great deal of timewriting letters of various types many of them are routine andrepetitive in character but they require proper consideration ifpotentially

architect s instructions professional practice for architects and - Jul 14 2023

web nov 29 2019 architect s instructions book author s david chappell first published 29 november 2019 doi org 10 1002 9781119540106 ch85 pdf tools share summary standard building contracts refer to instructions and whether they must be in writing or oral how they may be confirmed and by whom but strangely they rarely define an instruction

standard letters in architectural practice wiley online library - Jun 13 2023

web standard letters in architectural practice david chappell 3rd ed p cm includes index isbn 1 4051 1556 4 hardback 1 69 to client confirming instruction to do extra work 93 5 final proposals 94 letters 70 to client regarding modifications to size

shape location

architect s instructions - Oct 17 2023

web an instruction on a printed architect s instruction form is valid if signed by the architect an ordinary letter can also be a valid instruction if the architect wishes he or she can write the instruction on a piece of old roof tile or on the side of a brick

noor azlifah amir sutan universiti teknologi malaysia - Sep 16 2023

web 2 4 2 instruction direction 42 2 4 3 valid architect s instruction 42 2 5 provisions empowering architect s instrution 44 2 5 1 pam 2006 44 2 5 2 other malaysian forms 48 2 5 3 international forms 40 2 5 4 compliance with architect s instruction 52 2 6 disputes of architect s instruction 52 2 7 summary 49

sample letter of architect instruction pdf uniport edu - Mar 30 2022

web sample letter of architect instruction 1 12 downloaded from uniport edu ng on august 8 2023 by guest sample letter of architect instruction this is likewise one of the factors by obtaining the soft documents of this sample letter of architect instruction by online you might not require more

how to write an effective architecture cover letter - Nov 06 2022

web here s an example architecture cover letter sample introductory statement sample template dear manager s name hiring manager as a graduate architect based in the city of your city passionate about specific skill they need i was delighted to find your ad in where you found the ad for a specific architecture job position

valid and acceptable form and format of architect s instructions - May 12 2023

web may 1 2011 yet this scenario is too good to be true especially when involving people with millions of feelings and desires there are many external factors that lead to changes in each project thus valid instructions are required to formalize and bind these changes into the construction contracts