Service Manual

8040, 8045, 8050, 8055

Section 1 - General Information
Section 2 - Care and Safety
Section 3 - Maintenance
Section A - Attachments
Section B - Body and Framework
Section C - Electrics
Section D - Controls
Section E - Hydraulics
Section F - Gearboxes
Section J - Track and Running Gear
Section K - Engine

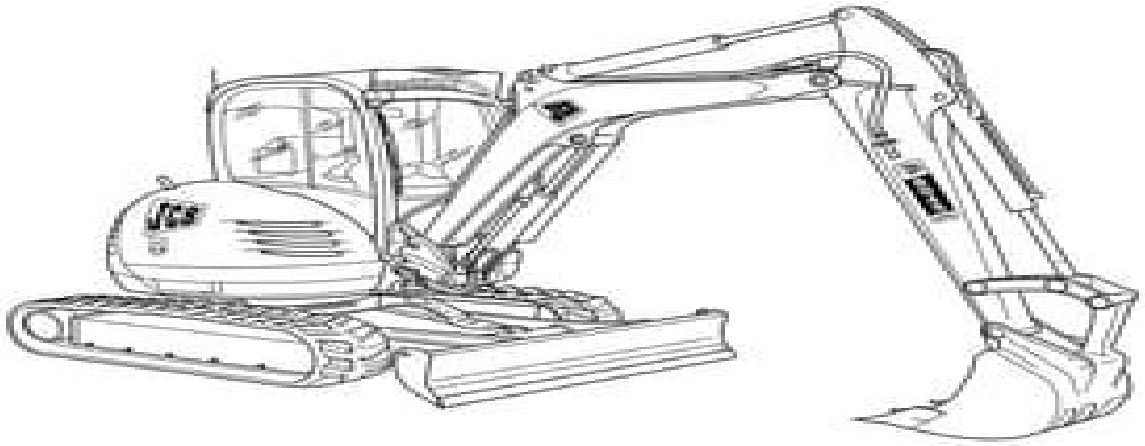

Publication No.
9813/1850-1

Copyright © 2004 JCB SERVICE. All rights reserved. No part of this publication may be reproduced, stored in a retrieval system, or transmitted in any form or by any other means, electronic, mechanical, photocopying or otherwise, without prior permission from JCB SERVICE.

Issued by JCB Technical Publications, JCB Information Training, Woodstock, Rocester, Staffordshire, ST14 3BW, England. Tel: +44 1889 591333 Fax: +44 1889 591400

World Class Customer Support

Jcb 8045 Manual

DJ Losen

Jcb 8045 Manual:

Uncover the mysteries within Crafted by is enigmatic creation, Embark on a Mystery with **Jcb 8045 Manual** . This downloadable ebook, shrouded in suspense, is available in a PDF format (*). Dive into a world of uncertainty and anticipation. Download now to unravel the secrets hidden within the pages.

https://staging.conocer.cide.edu/files/virtual-library/HomePages/heathkit_hr_1680_manual.pdf

Table of Contents Jcb 8045 Manual

1. Understanding the eBook Jcb 8045 Manual
    - The Rise of Digital Reading Jcb 8045 Manual
    - Advantages of eBooks Over Traditional Books
2. Identifying Jcb 8045 Manual
    - Exploring Different Genres
    - Considering Fiction vs. Non-Fiction
    - Determining Your Reading Goals
3. Choosing the Right eBook Platform
    - Popular eBook Platforms
    - Features to Look for in an Jcb 8045 Manual
    - User-Friendly Interface
4. Exploring eBook Recommendations from Jcb 8045 Manual
    - Personalized Recommendations
    - Jcb 8045 Manual User Reviews and Ratings
    - Jcb 8045 Manual and Bestseller Lists
5. Accessing Jcb 8045 Manual Free and Paid eBooks
    - Jcb 8045 Manual Public Domain eBooks
    - Jcb 8045 Manual eBook Subscription Services
    - Jcb 8045 Manual Budget-Friendly Options
6. Navigating Jcb 8045 Manual eBook Formats

- ePub, PDF, MOBI, and More
- Jcb 8045 Manual Compatibility with Devices
- Jcb 8045 Manual Enhanced eBook Features

7. Enhancing Your Reading Experience
   - Adjustable Fonts and Text Sizes of Jcb 8045 Manual
   - Highlighting and Note-Taking Jcb 8045 Manual
   - Interactive Elements Jcb 8045 Manual
8. Staying Engaged with Jcb 8045 Manual
   - Joining Online Reading Communities
   - Participating in Virtual Book Clubs
   - Following Authors and Publishers Jcb 8045 Manual
9. Balancing eBooks and Physical Books Jcb 8045 Manual
   - Benefits of a Digital Library
   - Creating a Diverse Reading Collection Jcb 8045 Manual
10. Overcoming Reading Challenges
    - Dealing with Digital Eye Strain
    - Minimizing Distractions
    - Managing Screen Time
11. Cultivating a Reading Routine Jcb 8045 Manual
    - Setting Reading Goals Jcb 8045 Manual
    - Carving Out Dedicated Reading Time
12. Sourcing Reliable Information of Jcb 8045 Manual
    - Fact-Checking eBook Content of Jcb 8045 Manual
    - Distinguishing Credible Sources
13. Promoting Lifelong Learning
    - Utilizing eBooks for Skill Development
    - Exploring Educational eBooks
14. Embracing eBook Trends
    - Integration of Multimedia Elements
    - Interactive and Gamified eBooks

Jcb 8045 Manual Introduction

Jcb 8045 Manual Offers over 60,000 free eBooks, including many classics that are in the public domain. Open Library: Provides access to over 1 million free eBooks, including classic literature and contemporary works. Jcb 8045 Manual Offers a vast collection of books, some of which are available for free as PDF downloads, particularly older books in the public domain. Jcb 8045 Manual : This website hosts a vast collection of scientific articles, books, and textbooks. While it operates in a legal gray area due to copyright issues, its a popular resource for finding various publications. Internet Archive for Jcb 8045 Manual : Has an extensive collection of digital content, including books, articles, videos, and more. It has a massive library of free downloadable books. Free-eBooks Jcb 8045 Manual Offers a diverse range of free eBooks across various genres. Jcb 8045 Manual Focuses mainly on educational books, textbooks, and business books. It offers free PDF downloads for educational purposes. Jcb 8045 Manual Provides a large selection of free eBooks in different genres, which are available for download in various formats, including PDF. Finding specific Jcb 8045 Manual, especially related to Jcb 8045 Manual, might be challenging as theyre often artistic creations rather than practical blueprints. However, you can explore the following steps to search for or create your own Online Searches: Look for websites, forums, or blogs dedicated to Jcb 8045 Manual, Sometimes enthusiasts share their designs or concepts in PDF format. Books and Magazines Some Jcb 8045 Manual books or magazines might include. Look for these in online stores or libraries. Remember that while Jcb 8045 Manual, sharing copyrighted material without permission is not legal. Always ensure youre either creating your own or obtaining them from legitimate sources that allow sharing and downloading. Library Check if your local library offers eBook lending services. Many libraries have digital catalogs where you can borrow Jcb 8045 Manual eBooks for free, including popular titles.Online Retailers: Websites like Amazon, Google Books, or Apple Books often sell eBooks. Sometimes, authors or publishers offer promotions or free periods for certain books.Authors Website Occasionally, authors provide excerpts or short stories for free on their websites. While this might not be the Jcb 8045 Manual full book , it can give you a taste of the authors writing style.Subscription Services Platforms like Kindle Unlimited or Scribd offer subscription-based access to a wide range of Jcb 8045 Manual eBooks, including some popular titles.

FAQs About Jcb 8045 Manual Books

What is a Jcb 8045 Manual PDF? A PDF (Portable Document Format) is a file format developed by Adobe that preserves the layout and formatting of a document, regardless of the software, hardware, or operating system used to view or print it.
How do I create a Jcb 8045 Manual PDF? There are several ways to create a PDF: Use software like Adobe Acrobat, Microsoft Word, or Google Docs, which often have built-in PDF creation tools. Print to PDF: Many applications and operating

systems have a "Print to PDF" option that allows you to save a document as a PDF file instead of printing it on paper. Online converters: There are various online tools that can convert different file types to PDF. **How do I edit a Jcb 8045 Manual PDF?** Editing a PDF can be done with software like Adobe Acrobat, which allows direct editing of text, images, and other elements within the PDF. Some free tools, like PDFescape or Smallpdf, also offer basic editing capabilities. **How do I convert a Jcb 8045 Manual PDF to another file format?** There are multiple ways to convert a PDF to another format: Use online converters like Smallpdf, Zamzar, or Adobe Acrobats export feature to convert PDFs to formats like Word, Excel, JPEG, etc. Software like Adobe Acrobat, Microsoft Word, or other PDF editors may have options to export or save PDFs in different formats. **How do I password-protect a Jcb 8045 Manual PDF?** Most PDF editing software allows you to add password protection. In Adobe Acrobat, for instance, you can go to "File" -> "Properties" -> "Security" to set a password to restrict access or editing capabilities. Are there any free alternatives to Adobe Acrobat for working with PDFs? Yes, there are many free alternatives for working with PDFs, such as: LibreOffice: Offers PDF editing features. PDFsam: Allows splitting, merging, and editing PDFs. Foxit Reader: Provides basic PDF viewing and editing capabilities. How do I compress a PDF file? You can use online tools like Smallpdf, ILovePDF, or desktop software like Adobe Acrobat to compress PDF files without significant quality loss. Compression reduces the file size, making it easier to share and download. Can I fill out forms in a PDF file? Yes, most PDF viewers/editors like Adobe Acrobat, Preview (on Mac), or various online tools allow you to fill out forms in PDF files by selecting text fields and entering information. Are there any restrictions when working with PDFs? Some PDFs might have restrictions set by their creator, such as password protection, editing restrictions, or print restrictions. Breaking these restrictions might require specific software or tools, which may or may not be legal depending on the circumstances and local laws.

Find Jcb 8045 Manual :

heathkit hr 1680 manual
henry moret collector s edition art gallery
heartbeats in africa a memoir of travel and love
~~hell yes apple should dump google in ios search~~
her forever hero unexpected heroes book english edition
heidi songs pacing guide
~~heinemann biology 1 4th edition answers~~
heath chemistry laboratory experiments answers
heidelberg tok operation guide

heidelberg sm 74 service manual
~~herbs and natural supplements an evidence based guide 3e~~
help vba reference guide
her husband s crown
heart of darkness study guide
heluva good french onion dip recipe

Jcb 8045 Manual :

McGraw Hill LINKS 101 102 - Spanish 102 -To Access the... From the drop-down menu, go to the chapter that you are working on, then scroll to the bottom and click on Laboratory Audio Program under More Resources. Note: ... Spanish 102 Chapter 5 -McGraw Hill Flashcards Study with Quizlet and memorize flashcards containing terms like El Barrio, La calle, La casa and more. Spanish | McGraw Hill Higher Education Course management, reporting, and student learning tools backed by great support. Connect® Master Online Learning Without Compromise. McGraw ... McGraw Hill Spanish Connect chapter 17 Flashcards La vida social y afectiva Learn with flashcards, games, and more — for free. Sign In | Connect | McGraw Hill Sign In | Connect | McGraw Hill. Skip to main content McGraw Hill Higher Ed page. Help. McGraw Hill Higher Ed page. Sign In. Email Address. Password. Forgot ... Spanish 102 • Communicate, with few errors, in Spanish using level-appropriate language for ... completing the McGraw-Hill “Connect” exercises (known as “Prep”, “Hmwk ... Webmail Login You have logged out. The system has detected that you are using Internet Explorer 11. cPanel & WHM no longer supports Internet Explorer 11. Looking for the answers to the McGraw Connect Spanish ... Looking for the answers to the McGraw Connect Spanish Homework, does anyone know where I may find the answers? FOREIGN LANGUAGE · SPANISH · SPN 2113. Connect | McGraw Hill: Sign In Sign In | Connect | McGraw Hill. Skip to main content McGraw Hill Higher Ed page. Help. McGraw Hill Higher Ed page. Sign In. Email Address. Password. Forgot ... Pfaff Quilt Expression 2046 Sewing Machine Pfaff Quilt Expression 2046 Reviews ... tksews recommends this machine after buying it for $1400. ... MooSmith recommends this machine after buying it for $1799. Instruction a manual Utility stitches, Quilt Expression 2046. Utility stitches, Expression 2034. Window, adjusting the contrast z. Zippers, sewing in. 1/4 inch quilt and patchwork ... Pfaff quilt expression 2046 Computerized Sewing Machine This PFAFF QUILT EXPRESSION 2046 sewing machine is a great addition to your crafting arsenal. With its computerized operation, it makes sewing a breeze. User manual Pfaff expression 2046 (English - 110 pages) The Pfaff expression 2046 is a sewing machine that offers a range of features suitable for various sewing projects. Designed for efficiency and functionality, ... Pfaff Quilt Expression 2046 (Pre-loved) This machine runs well and is sold as is with the accessories received when it was traded in. If shipping of machine is requested during checkout, ... Pfaff 2046 -

Quiltingboard Forums Jul 18, 2009 — I have a new Pfaff Quilt Expression 2046 that has a telfon bobbin and came with a 5 year warranty, and I paid lots more than the $500 your ... Pfaff Quilt Expression 2046 Parts Shop our extensive selection of Pfaff Quilt Expression 2046 parts & accessories! Quick delivery. 90-day returns. Free shipping over $49. Pfaff Quilt Expression 4.0 (Review) - YouTube Pfaff Quilt Expression 2046 Jun 21, 2010 — It is easy to use that you spent less time trying to thread your needles. FEATURES: THREADINGIt can help to pass the thread through the needle ... Prepare for the 2023 Ohio Civil Service Exam - JobTestPrep Prepare for your Ohio Civil Service Exam with practice tests, sample questions and answers, and relevant testing and application information. office of the civil service commission Feb 3, 2023 — The Louisville Civil Service Commission will conduct a written and oral open examination for the purpose of establishing an eligibility list ... Ohio OH - Civil Service Test Study Guide Book Ohio OH civil service test study guide and sample practice test. Review material and exercises for test preparation applicable to tests at the state, ... Working for the city/civil service exams : r/Columbus The test depends on the job from my experience. One of them was an inventory related job so most questions were scenarios and math related. Ohio Civil Service Test 2023: Prep Guide & Practice Exam In this article, you'll learn the most valuable tips for preparing for Ohio Civil Service Test and the basics of the application process. STUDY GUIDE This Study Guide is designed to help candidates do their best on the Police Officer examination. It contains information about the test itself and ... BMST - U.S. Army Corps of Engineers The BMST is the Basic Math and Science Test. It covers Algebra, Physics, Geometry and Electrical fundamentals. You have three hours to complete the test ... UNITED STATES CIVIL SERVICE COMMISSION The register shall show the name; official title; salary, compensa- tion, and emoluments; legal residence and place of employment for each person listed therein ... Free Firefighter Practice Test Try a free FST, NFSI or general Firefighter practice test with 20 questions. The tests include explanations to all questions, user statistics and a detailed ... Exam Learn everything you need to know about taking an ASWB social work licensing exam. Download the ASWB Exam Guidebook. Examination registration fees.