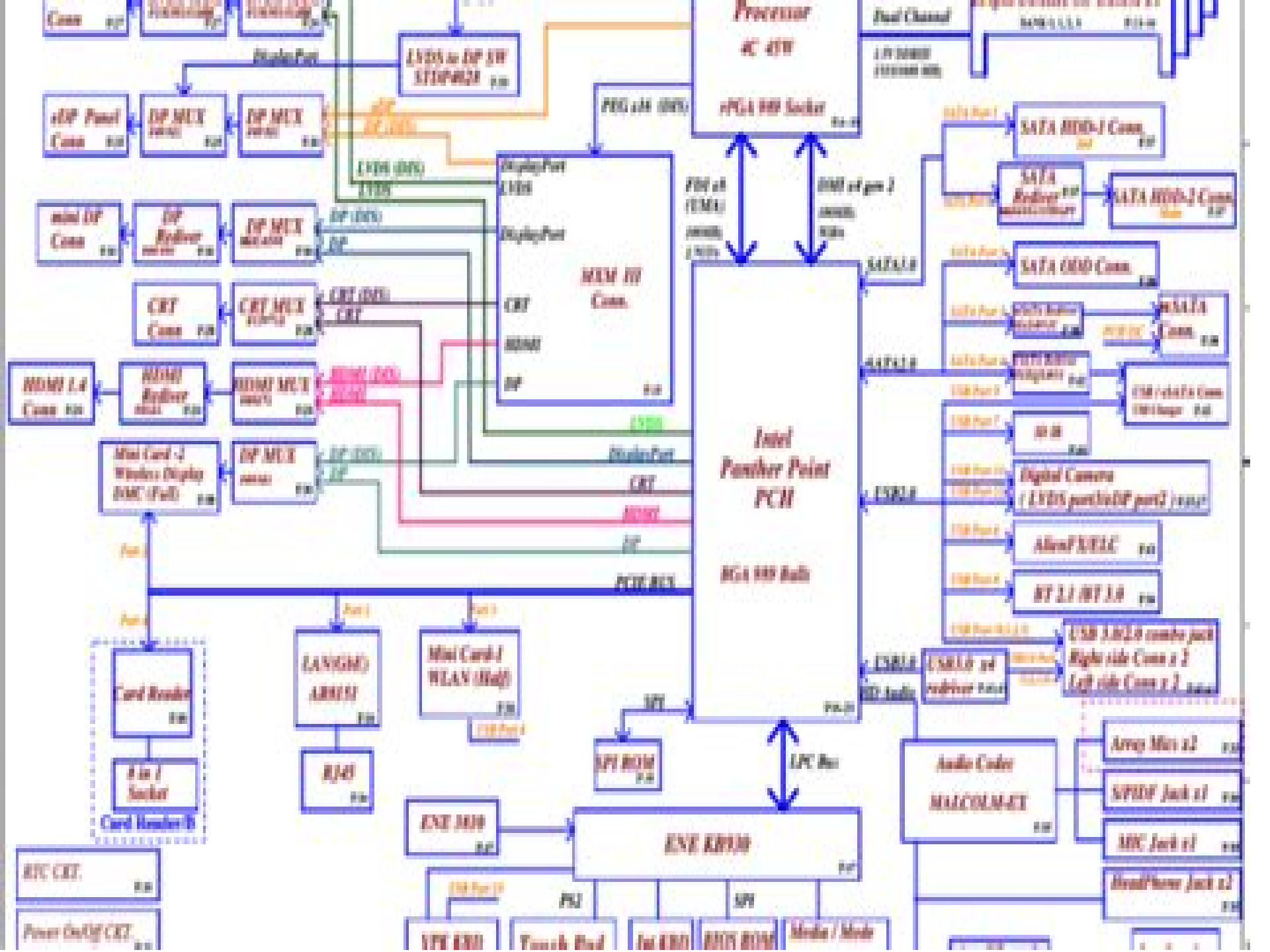

Processor
4C 45W
rPGA 989 Socket
Dual Channel
LVDS to DP SW
STDP4028
DisplayPort
eDP Panel Conn
DP MUX
DP MUX
PEG x16 (DIS)
LVDS (DIS)
LVDS
DisplayPort
LVDS
DisplayPort
CRT
HDMI
DP
MXM III Conn.
mini DP Conn
DP Redriver
DP MUX
DP (DIS)
DP
CRT Conn
CRT MUX
CRT (DIS)
CRT
HDMI 1.4 Conn
HDMI Redriver
HDMI MUX
HDMI (DIS)
HDMI
Mini Card -2 Wireless Display DMC (Full)
DP MUX
DP (DIS)
DP
LVDS
DisplayPort
CRT
HDMI
DP
PCIE BUS
FDI x8 (UMA)
DMI x4 gen 2
Intel Panther Point PCH
BGA 989 Balls
SATA HDD-1 Conn.
SATA Redriver
SATA HDD-2 Conn.
SATA ODD Conn.
SATA Conn.
SATA1.0
SATA2.0
USB2.0
USB3.0
USB 3.0/2.0 combo jack
Right side Conn x 2
Left side Conn x 2
USB3.0 x4 redriver
HD Audio
Digital Camera
AlienFX/ELC
BT 2.1 /BT 3.0
Card Reader
8 in 1 Socket
Card Reader/B
LAN(GbE)
AR8151
RJ45
Mini Card-1 WLAN (Half)
SPI
SPI ROM
LPC Bus
ENE 3810
ENE KB930
Audio Codec
MALCOLM-EX
Array Mics x2
S/PIDF Jack x1
MIC Jack x1
HeadPhone Jack x2
RTC CKT.
Power On/Off CKT.
PS2
SPI
Touch Pad
Int KBD
BIOS ROM
Media / Mode

Lenovo 300g45notebook Laptop Schematic Full

SJ Ball

Lenovo 300g45notebook Laptop Schematic Full:

Thank you totally much for downloading **Lenovo 300g45notebook Laptop Schematic Full**.Maybe you have knowledge that, people have look numerous time for their favorite books following this Lenovo 300g45notebook Laptop Schematic Full, but stop occurring in harmful downloads.

Rather than enjoying a good PDF with a mug of coffee in the afternoon, instead they juggled taking into account some harmful virus inside their computer. **Lenovo 300g45notebook Laptop Schematic Full** is user-friendly in our digital library an online right of entry to it is set as public thus you can download it instantly. Our digital library saves in compound countries, allowing you to get the most less latency era to download any of our books following this one. Merely said, the Lenovo 300g45notebook Laptop Schematic Full is universally compatible later any devices to read.

https://staging.conocer.cide.edu/About/uploaded-files/index.jsp/improving%20stroke%20in%2030%20days.pdf

Table of Contents Lenovo 300g45notebook Laptop Schematic Full

1. Understanding the eBook Lenovo 300g45notebook Laptop Schematic Full
    - The Rise of Digital Reading Lenovo 300g45notebook Laptop Schematic Full
    - Advantages of eBooks Over Traditional Books
2. Identifying Lenovo 300g45notebook Laptop Schematic Full
    - Exploring Different Genres
    - Considering Fiction vs. Non-Fiction
    - Determining Your Reading Goals
3. Choosing the Right eBook Platform
    - Popular eBook Platforms
    - Features to Look for in an Lenovo 300g45notebook Laptop Schematic Full
    - User-Friendly Interface
4. Exploring eBook Recommendations from Lenovo 300g45notebook Laptop Schematic Full
    - Personalized Recommendations
    - Lenovo 300g45notebook Laptop Schematic Full User Reviews and Ratings

- Lenovo 300g45notebook Laptop Schematic Full and Bestseller Lists

5. Accessing Lenovo 300g45notebook Laptop Schematic Full Free and Paid eBooks
   - Lenovo 300g45notebook Laptop Schematic Full Public Domain eBooks
   - Lenovo 300g45notebook Laptop Schematic Full eBook Subscription Services
   - Lenovo 300g45notebook Laptop Schematic Full Budget-Friendly Options
6. Navigating Lenovo 300g45notebook Laptop Schematic Full eBook Formats
   - ePub, PDF, MOBI, and More
   - Lenovo 300g45notebook Laptop Schematic Full Compatibility with Devices
   - Lenovo 300g45notebook Laptop Schematic Full Enhanced eBook Features
7. Enhancing Your Reading Experience
   - Adjustable Fonts and Text Sizes of Lenovo 300g45notebook Laptop Schematic Full
   - Highlighting and Note-Taking Lenovo 300g45notebook Laptop Schematic Full
   - Interactive Elements Lenovo 300g45notebook Laptop Schematic Full
8. Staying Engaged with Lenovo 300g45notebook Laptop Schematic Full
   - Joining Online Reading Communities
   - Participating in Virtual Book Clubs
   - Following Authors and Publishers Lenovo 300g45notebook Laptop Schematic Full
9. Balancing eBooks and Physical Books Lenovo 300g45notebook Laptop Schematic Full
   - Benefits of a Digital Library
   - Creating a Diverse Reading Collection Lenovo 300g45notebook Laptop Schematic Full
10. Overcoming Reading Challenges
    - Dealing with Digital Eye Strain
    - Minimizing Distractions
    - Managing Screen Time
11. Cultivating a Reading Routine Lenovo 300g45notebook Laptop Schematic Full
    - Setting Reading Goals Lenovo 300g45notebook Laptop Schematic Full
    - Carving Out Dedicated Reading Time
12. Sourcing Reliable Information of Lenovo 300g45notebook Laptop Schematic Full
    - Fact-Checking eBook Content of Lenovo 300g45notebook Laptop Schematic Full
    - Distinguishing Credible Sources

13. Promoting Lifelong Learning
    - Utilizing eBooks for Skill Development
    - Exploring Educational eBooks
14. Embracing eBook Trends
    - Integration of Multimedia Elements
    - Interactive and Gamified eBooks

Lenovo 300g45notebook Laptop Schematic Full Introduction

Lenovo 300g45notebook Laptop Schematic Full Offers over 60,000 free eBooks, including many classics that are in the public domain. Open Library: Provides access to over 1 million free eBooks, including classic literature and contemporary works. Lenovo 300g45notebook Laptop Schematic Full Offers a vast collection of books, some of which are available for free as PDF downloads, particularly older books in the public domain. Lenovo 300g45notebook Laptop Schematic Full : This website hosts a vast collection of scientific articles, books, and textbooks. While it operates in a legal gray area due to copyright issues, its a popular resource for finding various publications. Internet Archive for Lenovo 300g45notebook Laptop Schematic Full : Has an extensive collection of digital content, including books, articles, videos, and more. It has a massive library of free downloadable books. Free-eBooks Lenovo 300g45notebook Laptop Schematic Full Offers a diverse range of free eBooks across various genres. Lenovo 300g45notebook Laptop Schematic Full Focuses mainly on educational books, textbooks, and business books. It offers free PDF downloads for educational purposes. Lenovo 300g45notebook Laptop Schematic Full Provides a large selection of free eBooks in different genres, which are available for download in various formats, including PDF. Finding specific Lenovo 300g45notebook Laptop Schematic Full, especially related to Lenovo 300g45notebook Laptop Schematic Full, might be challenging as theyre often artistic creations rather than practical blueprints. However, you can explore the following steps to search for or create your own Online Searches: Look for websites, forums, or blogs dedicated to Lenovo 300g45notebook Laptop Schematic Full, Sometimes enthusiasts share their designs or concepts in PDF format. Books and Magazines Some Lenovo 300g45notebook Laptop Schematic Full books or magazines might include. Look for these in online stores or libraries. Remember that while Lenovo 300g45notebook Laptop Schematic Full, sharing copyrighted material without permission is not legal. Always ensure youre either creating your own or obtaining them from legitimate sources that allow sharing and downloading. Library Check if your local library offers eBook lending services. Many libraries have digital catalogs where you can borrow Lenovo 300g45notebook Laptop Schematic Full eBooks for free, including popular titles.Online Retailers: Websites like Amazon, Google Books, or Apple Books often sell eBooks. Sometimes, authors or publishers offer promotions or free periods for certain books.Authors Website

Occasionally, authors provide excerpts or short stories for free on their websites. While this might not be the Lenovo 300g45notebook Laptop Schematic Full full book , it can give you a taste of the authors writing style.Subscription Services Platforms like Kindle Unlimited or Scribd offer subscription-based access to a wide range of Lenovo 300g45notebook Laptop Schematic Full eBooks, including some popular titles.

FAQs About Lenovo 300g45notebook Laptop Schematic Full Books

What is a Lenovo 300g45notebook Laptop Schematic Full PDF? A PDF (Portable Document Format) is a file format developed by Adobe that preserves the layout and formatting of a document, regardless of the software, hardware, or operating system used to view or print it. **How do I create a Lenovo 300g45notebook Laptop Schematic Full PDF?** There are several ways to create a PDF: Use software like Adobe Acrobat, Microsoft Word, or Google Docs, which often have built-in PDF creation tools. Print to PDF: Many applications and operating systems have a "Print to PDF" option that allows you to save a document as a PDF file instead of printing it on paper. Online converters: There are various online tools that can convert different file types to PDF. **How do I edit a Lenovo 300g45notebook Laptop Schematic Full PDF?** Editing a PDF can be done with software like Adobe Acrobat, which allows direct editing of text, images, and other elements within the PDF. Some free tools, like PDFescape or Smallpdf, also offer basic editing capabilities. **How do I convert a Lenovo 300g45notebook Laptop Schematic Full PDF to another file format?** There are multiple ways to convert a PDF to another format: Use online converters like Smallpdf, Zamzar, or Adobe Acrobats export feature to convert PDFs to formats like Word, Excel, JPEG, etc. Software like Adobe Acrobat, Microsoft Word, or other PDF editors may have options to export or save PDFs in different formats. **How do I password-protect a Lenovo 300g45notebook Laptop Schematic Full PDF?** Most PDF editing software allows you to add password protection. In Adobe Acrobat, for instance, you can go to "File" -> "Properties" -> "Security" to set a password to restrict access or editing capabilities. Are there any free alternatives to Adobe Acrobat for working with PDFs? Yes, there are many free alternatives for working with PDFs, such as: LibreOffice: Offers PDF editing features. PDFsam: Allows splitting, merging, and editing PDFs. Foxit Reader: Provides basic PDF viewing and editing capabilities. How do I compress a PDF file? You can use online tools like Smallpdf, ILovePDF, or desktop software like Adobe Acrobat to compress PDF files without significant quality loss. Compression reduces the file size, making it easier to share and download. Can I fill out forms in a PDF file? Yes, most PDF viewers/editors like Adobe Acrobat, Preview (on Mac), or various online tools allow you to fill out forms in PDF files by selecting text fields and entering information. Are there any restrictions when working with PDFs? Some PDFs might have restrictions set by their creator, such as password protection, editing restrictions, or print restrictions. Breaking these restrictions might require specific software or tools, which may or

may not be legal depending on the circumstances and local laws.

Find Lenovo 300g45notebook Laptop Schematic Full :

improving stroke in 30 days
imminent a truth seekers end of the world conspiracy thriller
imago mundi tome nom de code babylone
~~imsa traffic signal inspection manual~~
incomplete english edition
impresora hp laserjet pro p1102w manual
~~impact 50 short stories answers~~
incropera introduction heat transfer solutions manual 6th
in the united states of africa
impco spectrum epr manual
incropera heat transfer solutions manual 5th
~~impact 5 workbook answers~~
ina garten recipe best
in basket exercise
image runner manual

Lenovo 300g45notebook Laptop Schematic Full :

 Chapter 11 Apr 7, 2019 — Express your answer using two significant figures. ANSWER: Part B. Find the horizontal component of the force that the axle exerts on the crane. Chapter 11 Mastering Physics | PDF Answers to Mastering Physics Chapter 11. ... Solutions Manual to Accompany Geometry of Convex Sets. I. E. Leonard. Exploring LEGO Mindstorms EV3 ... Mastering Physics Chapter 11 Homework - YouTube Chapter 11 and 13 Homework | PDF | Orbit | Gravity Mastering Physics Chapter 11 and 13 Equilibrium and Elasticity Gravitation Answers to my homework. Copyright: © All Rights Reserved. Available Formats. Download ... Mastering Physics Solutions Chapter 11 Rotational ... Parts of this slide didn't load. Try reloading Reload. Erase allShift+A. Some slides didn't load. Refresh. Open speaker notesS. Turn on the laser pointerL. Physics with MasteringPhysics 4th Edition solutions Physics. Physics / Physics with MasteringPhysics 4 / Chapter 11. Physics with MasteringPhysics | 4th Edition | ISBN: 9780321541635 | Authors: James S. New ... Mastering Physics Chapter 11

homework Flashcards Study with Quizlet and memorize flashcards containing terms like A. Five locations labeled A through E are indicated on the diagram. Which of these, if any, ... Chapter 11 Solutions Manual Problem Chapter 11 Solutions Manual PDF solution from Essential University Physics by Richard Wolfson. College Physics with MasteringPhysics - Chapter 11 ... Access College Physics with MasteringPhysics 7th Edition Chapter 11 solutions now. Our solutions are written by Chegg experts so you can be assured of the ... Mastering Physics Solutions by Chapter | Engineering Hero Mastering Physics Solutions by Chapter. Explanations and methods to the ... Chapter 11 · Chapter 12 · Chapter 13 · Chapter 14 · Chapter 15 · Chapter 16 · Chapter ... Wordchains Wordchains. L.M. Guron. Wordchains is a group reading test, designed to act as a possible indicator for pupils with specific learning difficulties such as ... Miller-Guron, L. (1999). Word chains A word reading test ... Two experimental versions of this unique, silent, group-administered screener of reading fluency and comprehension require adolescents and adults either to read ... Wordchains: A Word Reading Test for All Ages Bibliographic information ; Title, Wordchains: A Word Reading Test for All Ages ; Author, Louise Miller-Guron ; Publisher, NFER-Nelson ; Length, 80 pages. Wordchains Test Nfer Nelson Pdf It will agreed ease you to look guide Wordchains Test Nfer Nelson pdf as you such as. ... If you goal to download and install the Wordchains Test Nfer Nelson pdf, ... Rapid Assessment of Beginning Reading Proficiency This test has great potential as a quick assessment of word recognition skills. In this test, children are required to divide chains of letters (e.g., ... WordSword: An Efficient Online Word Reading Assessment for ... Sep 1, 2023 — The test targets word identification skills. The examinee identifies letters in the first part and reads aloud individual words in the second ... NFER Tests NFER's termly tests for years 1-6 enable reliable attainment and progress monitoring. Benefit from national benchmarking data and a free online analysis ... Unique Screener of Reading Fluency and Comprehension ... by SM Bell · 2012 · Cited by 5 — Word chains: A word reading test for all ages. Windsor, England: NFER-Nelson. National Institute of Child Health and Human Development (2000). Report of the ... A technique for group screening of dyslexia among adults by U Wolff · 2003 · Cited by 92 — Wordchains. A word reading test for all ages. Windsor: NFER-Nelson. Google Scholar. Miller Guron, L., & Lundberg, I. (2003). Identifying ... Sony Ericsson VH310 User Manual View and Download Sony Ericsson VH310 user manual online. VH310 headsets pdf manual download. User guide This User guide focuses on use with a Sony Ericsson mobile phone. Charging the headset. Before using the VH310 for the first time, you need to charge it with ... DDA-2024 Bluetooth Headset User Manual ... - FCC ID Bluetooth Headset 08 user manual details for FCC ID PY7DDA-2024 made by Sony Mobile Communications Inc. Document Includes User Manual VH310_Gorkim_UG.book. Handsfree VH310 | PDF - Scribd Sony Ericsson VH310 This User guide is published by Sony Ericsson Mobile Communications AB, without any warranty. Improvements and changes to this User ... Sony Ericsson Bluetooth Headset VH310 The Sony Ericsson VH310 is ideal for long conversations or a day full of hands-on tasks. - Sony Ericsson Bluetooth Headset VH310. Sony Ericsson VH310 Bluetooth Headset Black NEW Sony Ericsson VH310 Bluetooth Headset; AC charger; Quick start guide. Specifications.

Availability: Usually Ships within 1-2 business days. Condition: New ... VH410 - User guide The VH410 Bluetooth™ Handsfree can be connected to any Bluetooth™ compatible device that supports the headset. This User guide focuses on use with a Sony. Sony Ericsson intros T715 slider, VH310 Bluetooth headset Jun 25, 2009 — The newly announced slider features a 3.2 megapixel camera with "photo light" (don't call it a flash), sunlight-viewable 2.2-inch QVGA display, ... Sony Ericsson Bluetooth Headset VH-310 by Dave Lim ... VH-310.