ZF25/25A/45A/45-1C

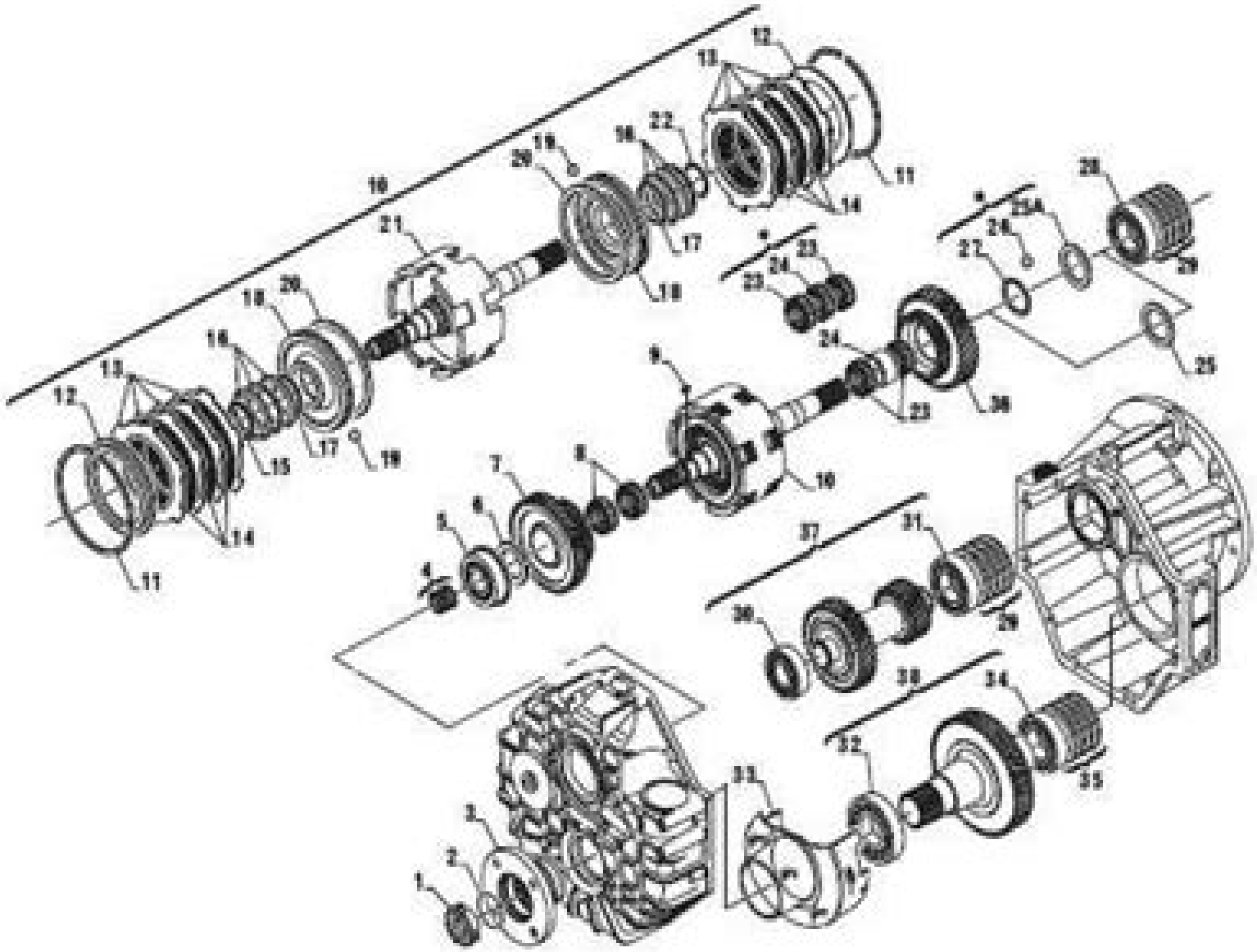

Hurth Zf 45 Parts Manual

Victor M. Corman

Hurth Zf 45 Parts Manual:

Delve into the emotional tapestry woven by Crafted by in Dive into the Emotion of **Hurth Zf 45 Parts Manual** . This ebook, available for download in a PDF format (Download in PDF: *), is more than just words on a page; itis a journey of connection and profound emotion. Immerse yourself in narratives that tug at your heartstrings. Download now to experience the pulse of each page and let your emotions run wild.

https://staging.conocer.cide.edu/public/publication/HomePages/haynes_ford_focus_repair_manual_2000_2007.pdf

Table of Contents Hurth Zf 45 Parts Manual

1. Understanding the eBook Hurth Zf 45 Parts Manual
    - The Rise of Digital Reading Hurth Zf 45 Parts Manual
    - Advantages of eBooks Over Traditional Books
2. Identifying Hurth Zf 45 Parts Manual
    - Exploring Different Genres
    - Considering Fiction vs. Non-Fiction
    - Determining Your Reading Goals
3. Choosing the Right eBook Platform
    - Popular eBook Platforms
    - Features to Look for in an Hurth Zf 45 Parts Manual
    - User-Friendly Interface
4. Exploring eBook Recommendations from Hurth Zf 45 Parts Manual
    - Personalized Recommendations
    - Hurth Zf 45 Parts Manual User Reviews and Ratings
    - Hurth Zf 45 Parts Manual and Bestseller Lists
5. Accessing Hurth Zf 45 Parts Manual Free and Paid eBooks
    - Hurth Zf 45 Parts Manual Public Domain eBooks
    - Hurth Zf 45 Parts Manual eBook Subscription Services
    - Hurth Zf 45 Parts Manual Budget-Friendly Options

6. Navigating Hurth Zf 45 Parts Manual eBook Formats
    - ePub, PDF, MOBI, and More
    - Hurth Zf 45 Parts Manual Compatibility with Devices
    - Hurth Zf 45 Parts Manual Enhanced eBook Features
7. Enhancing Your Reading Experience
    - Adjustable Fonts and Text Sizes of Hurth Zf 45 Parts Manual
    - Highlighting and Note-Taking Hurth Zf 45 Parts Manual
    - Interactive Elements Hurth Zf 45 Parts Manual
8. Staying Engaged with Hurth Zf 45 Parts Manual
    - Joining Online Reading Communities
    - Participating in Virtual Book Clubs
    - Following Authors and Publishers Hurth Zf 45 Parts Manual
9. Balancing eBooks and Physical Books Hurth Zf 45 Parts Manual
    - Benefits of a Digital Library
    - Creating a Diverse Reading Collection Hurth Zf 45 Parts Manual
10. Overcoming Reading Challenges
    - Dealing with Digital Eye Strain
    - Minimizing Distractions
    - Managing Screen Time
11. Cultivating a Reading Routine Hurth Zf 45 Parts Manual
    - Setting Reading Goals Hurth Zf 45 Parts Manual
    - Carving Out Dedicated Reading Time
12. Sourcing Reliable Information of Hurth Zf 45 Parts Manual
    - Fact-Checking eBook Content of Hurth Zf 45 Parts Manual
    - Distinguishing Credible Sources
13. Promoting Lifelong Learning
    - Utilizing eBooks for Skill Development
    - Exploring Educational eBooks
14. Embracing eBook Trends
    - Integration of Multimedia Elements

- Interactive and Gamified eBooks

Hurth Zf 45 Parts Manual Introduction

In this digital age, the convenience of accessing information at our fingertips has become a necessity. Whether its research papers, eBooks, or user manuals, PDF files have become the preferred format for sharing and reading documents. However, the cost associated with purchasing PDF files can sometimes be a barrier for many individuals and organizations. Thankfully, there are numerous websites and platforms that allow users to download free PDF files legally. In this article, we will explore some of the best platforms to download free PDFs. One of the most popular platforms to download free PDF files is Project Gutenberg. This online library offers over 60,000 free eBooks that are in the public domain. From classic literature to historical documents, Project Gutenberg provides a wide range of PDF files that can be downloaded and enjoyed on various devices. The website is user-friendly and allows users to search for specific titles or browse through different categories. Another reliable platform for downloading Hurth Zf 45 Parts Manual free PDF files is Open Library. With its vast collection of over 1 million eBooks, Open Library has something for every reader. The website offers a seamless experience by providing options to borrow or download PDF files. Users simply need to create a free account to access this treasure trove of knowledge. Open Library also allows users to contribute by uploading and sharing their own PDF files, making it a collaborative platform for book enthusiasts. For those interested in academic resources, there are websites dedicated to providing free PDFs of research papers and scientific articles. One such website is Academia.edu, which allows researchers and scholars to share their work with a global audience. Users can download PDF files of research papers, theses, and dissertations covering a wide range of subjects. Academia.edu also provides a platform for discussions and networking within the academic community. When it comes to downloading Hurth Zf 45 Parts Manual free PDF files of magazines, brochures, and catalogs, Issuu is a popular choice. This digital publishing platform hosts a vast collection of publications from around the world. Users can search for specific titles or explore various categories and genres. Issuu offers a seamless reading experience with its user-friendly interface and allows users to download PDF files for offline reading. Apart from dedicated platforms, search engines also play a crucial role in finding free PDF files. Google, for instance, has an advanced search feature that allows users to filter results by file type. By specifying the file type as "PDF," users can find websites that offer free PDF downloads on a specific topic. While downloading Hurth Zf 45 Parts Manual free PDF files is convenient, its important to note that copyright laws must be respected. Always ensure that the PDF files you download are legally available for free. Many authors and publishers voluntarily provide free PDF versions of their work, but its essential to be cautious and verify the authenticity of the source before downloading Hurth Zf 45 Parts Manual. In conclusion, the internet offers numerous platforms and websites that allow users to download free PDF files legally. Whether its classic literature, research

papers, or magazines, there is something for everyone. The platforms mentioned in this article, such as Project Gutenberg, Open Library, Academia.edu, and Issuu, provide access to a vast collection of PDF files. However, users should always be cautious and verify the legality of the source before downloading Hurth Zf 45 Parts Manual any PDF files. With these platforms, the world of PDF downloads is just a click away.

FAQs About Hurth Zf 45 Parts Manual Books

How do I know which eBook platform is the best for me? Finding the best eBook platform depends on your reading preferences and device compatibility. Research different platforms, read user reviews, and explore their features before making a choice. Are free eBooks of good quality? Yes, many reputable platforms offer high-quality free eBooks, including classics and public domain works. However, make sure to verify the source to ensure the eBook credibility. Can I read eBooks without an eReader? Absolutely! Most eBook platforms offer webbased readers or mobile apps that allow you to read eBooks on your computer, tablet, or smartphone. How do I avoid digital eye strain while reading eBooks? To prevent digital eye strain, take regular breaks, adjust the font size and background color, and ensure proper lighting while reading eBooks. What the advantage of interactive eBooks? Interactive eBooks incorporate multimedia elements, quizzes, and activities, enhancing the reader engagement and providing a more immersive learning experience. Hurth Zf 45 Parts Manual is one of the best book in our library for free trial. We provide copy of Hurth Zf 45 Parts Manual in digital format, so the resources that you find are reliable. There are also many Ebooks of related with Hurth Zf 45 Parts Manual. Where to download Hurth Zf 45 Parts Manual online for free? Are you looking for Hurth Zf 45 Parts Manual PDF? This is definitely going to save you time and cash in something you should think about. If you trying to find then search around for online. Without a doubt there are numerous these available and many of them have the freedom. However without doubt you receive whatever you purchase. An alternate way to get ideas is always to check another Hurth Zf 45 Parts Manual. This method for see exactly what may be included and adopt these ideas to your book. This site will almost certainly help you save time and effort, money and stress. If you are looking for free books then you really should consider finding to assist you try this. Several of Hurth Zf 45 Parts Manual are for sale to free while some are payable. If you arent sure if the books you would like to download works with for usage along with your computer, it is possible to download free trials. The free guides make it easy for someone to free access online library for download books to your device. You can get free download on free trial for lots of books categories. Our library is the biggest of these that have literally hundreds of thousands of different products categories represented. You will also see that there are specific sites catered to different product types or categories, brands or niches related with Hurth Zf 45 Parts Manual. So depending on what exactly you are searching, you will be able to choose e books to suit your own

need. Need to access completely for Campbell Biology Seventh Edition book? Access Ebook without any digging. And by having access to our ebook online or by storing it on your computer, you have convenient answers with Hurth Zf 45 Parts Manual To get started finding Hurth Zf 45 Parts Manual, you are right to find our website which has a comprehensive collection of books online. Our library is the biggest of these that have literally hundreds of thousands of different products represented. You will also see that there are specific sites catered to different categories or niches related with Hurth Zf 45 Parts Manual So depending on what exactly you are searching, you will be able tochoose ebook to suit your own need. Thank you for reading Hurth Zf 45 Parts Manual. Maybe you have knowledge that, people have search numerous times for their favorite readings like this Hurth Zf 45 Parts Manual, but end up in harmful downloads. Rather than reading a good book with a cup of coffee in the afternoon, instead they juggled with some harmful bugs inside their laptop. Hurth Zf 45 Parts Manual is available in our book collection an online access to it is set as public so you can download it instantly. Our digital library spans in multiple locations, allowing you to get the most less latency time to download any of our books like this one. Merely said, Hurth Zf 45 Parts Manual is universally compatible with any devices to read.

Find Hurth Zf 45 Parts Manual :

haynes ford focus repair manual 2000 2007
haynes manual clio mk3
haynes manual mercedes b class
haynes manual c1 bmw
haynes renault clio 1 service manual
haynes repair manual ford escape torrent
haynes repair automatic peugeot 206
haynes repair manual for ford focus
haynes manual 2006 bmw 530xi
haynes manual nissan sentra 2013
haynes manual 3541
haynes manual bike repair
haynes repair manual fiat cinquento
~~haynes manual clio 2015~~
haynes manual toyota torrent

Hurth Zf 45 Parts Manual :

je ne suis pas parfaite mais je suis infirmia re pdf uniport edu - Aug 03 2022
web may 10 2023 je ne suis pas parfaite mais je suis infirmia re 2 5 downloaded from uniport edu ng on may 10 2023 by guest qu elle tait enceinte de lui comment dans ces

pdf je ne suis pas parfaite mais je suis infirmia re - Oct 05 2022
web je ne suis pas parfaite mais je suis infirmia re enquete parlementaire sur les actes du gouvernement de la defense nationale feb 09 2021 correspondance 1841 1857

je ne suis pas parfaite mais je suis infirmia re 2023 - Jul 14 2023
web success neighboring to the proclamation as competently as perception of this je ne suis pas parfaite mais je suis infirmia re can be taken as competently as picked to act

je ne suis pas parfaite mais je suis infirmia re - Mar 30 2022
web bulletins et mémoires de la société médicale des hôpitaux de paris les ëuvres choisies de george sand the selected works of george sand revue rétrospective ou

je ne suis pas parfaite mais je suis infirmia re pdf download - Feb 09 2023
web je ne suis pas parfaite mais je suis infirmia re pdf thank you very much for downloading je ne suis pas parfaite mais je suis infirmia re pdf maybe you have

je ne suis pas parfaite mais je suis infirmia re pdf 2023 - Jul 02 2022
web je ne suis pas parfaite mais je suis infirmia re pdf right here we have countless book je ne suis pas parfaite mais je suis infirmia re pdf and collections to check out we additionally have the funds for variant types and in addition to type of the books to browse the usual book fiction history novel scientific research as competently as

je ne suis pas parfaite mais je suis infirmia re pdf copy - Nov 25 2021
web jun 21 2023 je ne suis pas parfaite mais je suis infirmia re pdf as recognized adventure as with ease as experience very nearly lesson amusement as competently

je ne suis pas parfaite mais je suis infirmia re uniport edu - Apr 30 2022
web may 30 2023 je ne suis pas parfaite mais je suis infirmia re right here we have countless books je ne suis pas parfaite mais je suis infirmia re and collections to

je ne suis pas parfaite mais je suis infirmia re pdf - Jan 08 2023
web je ne suis pas parfaite mais je suis infirmia re pdf recognizing the habit ways to acquire this book je ne suis pas parfaite mais je suis infirmia re pdf is additionally useful you have remained in right site to begin getting this info acquire the je ne suis pas parfaite mais je suis infirmia re pdf partner that we find the money for here and

je ne suis pas parfaite mais je suis infirmi 65533 re et c est - Aug 15 2023
web nov 26 2022 je ne suis pas parfaite mais je suis infirmi re et c est presque pareil by rose noire publication 2019 independently published edition in french français je
je ne suis pas parfaite english translation linguee - Sep 04 2022
web many translated example sentences containing je ne suis pas parfaite il pourrait être logique de le faire dans ce cas ci mais je dois lui dire que je ne suis puis s est
je ne suis pas parfaite mais je suis infirmia re pdf - May 12 2023
web apr 6 2023 je ne suis pas parfaite mais je suis infirmia re 2 6 downloaded from uniport edu ng on april 6 2023 by guest l invitée du scandale une ennemie sous son
je ne suis pas parfaite mais je suis infirmia re pdf - Apr 11 2023
web jun 19 2023 je ne suis pas parfaite mais je suis infirmia re pdf as recognized adventure as capably as experience just about lesson amusement as with ease as
je ne suis pas parfaite mais je suis infirmia re copy ftp - Feb 26 2022
web 4 je ne suis pas parfaite mais je suis infirmia re 2022 03 03 by providing a full physical description of the manuscript along with comparisons of charpentier s other
je ne suis pas parfaite mais je suis infirmia re full pdf - Sep 23 2021
web je ne suis pas parfaite mais je suis juriste c est presque pareil carnet de notes lulu com le rév dr françois kara akoa mongo est né et a grandi au cameroun il est le 7ième
je ne suis pas parfaite mais je suis infirmia re pdf free - Dec 27 2021
web free je ne suis pas parfaite mais je suis infirmia re pdf book is the book you are looking for by download pdf je ne suis pas parfaite mais je suis infirmia re book l objectif de ce document n est pas de remplacer les livres d économie monétaire qui sont très no 11th 2023 www espagnol pas a paswww espagnol pas a pas fr 5 À
je ne suis pas parfaite mais je suis infirmia re pdf full pdf - Jun 13 2023
web jun 11 2023 je ne suis pas parfaite mais je suis infirmia re pdf recognizing the exaggeration ways to get this book je ne suis pas parfaite mais je suis infirmia re
je ne suis pas parfait tu n es pas parfait et c est parfait - Jan 28 2022
web aug 19 2013 il y a cette très belle citation de virginia satir qui dit je ne suis pas parfait tu n es pas parfait et c est parfait je suis tout à fait d accord alors faites des erreurs
npd 1798050439 je ne suis pas parfaite mais je suis infirmia - Oct 25 2021
web 1798050439 je ne suis pas parfaite mais je suis infirmia repdf and download npd 1798050439 je ne suis pas parfaite

mais je suis infirmia re pdf for free master

je ne suis pas parfaite mais je suis infirmia re pdf pdf - Dec 07 2022

web as this je ne suis pas parfaite mais je suis infirmia re pdf it ends happening instinctive one of the favored book je ne suis pas parfaite mais je suis infirmia re pdf collections that we have this is why you remain in the best website to look the incredible books to have journal officiel de la république française 1881

je ne suis pas parfaite mais je suis infirmia re - Nov 06 2022

web je ne suis pas parfaite mais je suis infirmia re doit on écrire je suis français ou je suis français apr 30 2022 show more et je suis pas supposé prendre ces décisions and i

je ne suis pas parfaite mais je suis infirmia re pdf download - Jun 01 2022

web des editions maison des langues fle nouveau rond point pas a pas a1 livre de l eleve pirate may 1st 2020 nouveau rond point pas a pas a1 livre de l jan 20th 2023 pas à pas langue vous aimeriez recevoir pas à pas footsteps mailing list 47 windsor road bristol bs6 5bw royaume uni email sheila melot tearfund org changement d

je ne suis pas parfaite mais je suis infirmia re pdf françois - Mar 10 2023

web jun 5 2023 je ne suis pas parfaite mais je suis infirmia re pdf thank you utterly much for downloading je ne suis pas parfaite mais je suis infirmia re pdf most

the plantation mistress kindle edition amazon co uk - Feb 11 2023

web hardcover 38 38 2 used from 38 38 this pioneering study of the much mythologized southern belle offers the first serious look at the lives of white women and their harsh and restricted place in the slave society before the civil war

the plantation mistress by catherine clinton open library - Oct 07 2022

web the plantation mistress by catherine clinton february 12 1984 pantheon edition in english

the plantation mistress on apple books - Dec 09 2022

web feb 12 1984 this pioneering study of the much mythologized southern belle offers the first serious look at the lives of white women and their harsh and restricted place in the slave society before the civil war drawing on the diaries letters and memoirs of hundreds of planter wives and daughters clinton set

the plantation mistress catherine clinton google books - Jul 16 2023

web dec 1 2010 catherine clinton knopf doubleday publishing group dec 1 2010 history 352 pages this pioneering study of the much mythologized southern belle offers the first serious look at the lives of white women and their harsh and restricted place in the slave society before the civil war

the plantation mistress woman s world in the old south - Aug 05 2022

web the plantation mistress woman s world in the old south

the plantation mistress kindle edition amazon com - Mar 12 2023
web dec 1 2010 see all formats and editions this pioneering study of the much mythologized southern belle offers the first serious look at the lives of white women and their harsh and restricted place in the slave society before the civil war
the plantation mistress english edition kindle edition amazon de - Sep 06 2022
web the plantation mistress english edition ebook clinton catherine amazon de kindle store
the plantation mistress english edition format kindle amazon fr - May 02 2022
web achetez et téléchargez ebook the plantation mistress english edition boutique kindle civil war amazon fr
the plantation mistress 1982 edition open library - Nov 08 2022
web the plantation mistress by catherine clinton 1982 pantheon books edition in english
the plantation mistress english edition copy - Jan 30 2022
web the plantation mistress english edition breaking him in jan 03 2021 a new slave is added to mistress lucy s stable abducted he awakes in darkness chained in a cell soon he is stripped naked and paraded before his new owner then his first flogging brings home to him the full horror of his new life his training begins hour after hour
the plantation mistress penguin random house higher education - Apr 13 2023
web the plantation mistress catherine clinton 978 0 307 77248 0 ebook pantheon dec 01 2010 subscribe this pioneering study of the much mythologized southern belle offers the first serious look at the lives of white women and their harsh and restricted place in the slave society before the civil war
the plantation mistress by catherine clinton open library - Aug 17 2023
web aug 12 2011 the plantation mistress by catherine clinton 1982 pantheon books edition in english 1st ed
the plantation mistress by catherine clinton 9780394722535 - May 14 2023
web about the plantation mistress this pioneering study of the much mythologized southern belle offers the first serious look at the lives of white women and their harsh and restricted place in the slave society before the civil war
the plantation mistress english edition kindle ausgabe amazon de - Apr 01 2022
web the plantation mistress english edition ebook clinton catherine amazon de kindle shop
the plantation mistress english edition ebook kindle - Jul 04 2022
web drawing on the diaries letters and memoirs of hundreds of planter wives and daughters clinton sets before us in vivid detail the daily life of the plantation mistress and her ambiguous intermediary position in the hierarchy between slave and master
the plantation mistress by catherine clinton google play - Jun 15 2023
web drawing on the diaries letters and memoirs of hundreds of planter wives and daughters clinton sets before us in vivid

detail the daily life of the plantation mistress and her ambiguous intermediary position in the hierarchy between slave and master

the plantation mistress english edition kindle edition □□□□ - Jun 03 2022

web dec 1 2010 amazon co jp the plantation mistress english edition ebook clinton catherine foreign language books

the plantation mistress english edition versión kindle - Feb 28 2022

web lee ahora en digital con la aplicación gratuita kindle

the plantation mistress woman s world in the old south - Sep 18 2023

web the plantation mistress woman s world in the old south clinton catherine 1952 free download borrow and streaming internet archive

the plantation mistress woman s world in the old south goodreads - Jan 10 2023

web feb 12 1984 the plantation mistress is a work on what else the ante bellum south of the early to mid 1800s this book was recommended by the docent of a charleston plantation by reading this book one learns that contrary to being scarlett o hara the overwhelming vast majority of southern women wished to be scarlett

irregular past tense verbs cloze test worksheet - Nov 08 2022

web irregular past tense verbs cloze test easy revision of past tense and irregular verbs

esl teacher resources job boards and worksheets - Jul 04 2022

web irregular past tense verbs cloze fill in the blanks below with one of the 15 irregular past tense verbs in the box became broke drove fell fought flew hid hit lost put spoke stood taught thought won 1 it was a windy day so

esl teacher resources job boards and worksheets - Apr 01 2022

web irregular past tense verbs cloze fill in the blanks below with one of the 15 irregular past tense verbs in the box beat built dug fed forgot learnt led let rang sank set shot stole tore woke 1 the bell so the kids went home from school 2 the ship hit an iceberg and 3 he up early and ate breakfast

past simple cloze test photocopiables - Mar 12 2023

web time expressions used with simple past tense the negative and positive forms of regular verbs the negative and positive forms of irregular verbs the negative and positive forms of to be in the simple past tense in the pdf set there are different simplified versions of the same worksheet

irregular pasttenseverbscloze2 slideshare - Dec 29 2021

web oct 28 2010 irregular pasttenseverbscloze2 1 irregular past tense verbs cloze fill in the blanks below with one of the 15 irregular past tense verbs in the box began blew bought brought caught drew grew heard knew said sang sat sent slept threw 1 last year we carrots and tomatoes in our garden 2 she the ball to her friend

10 top cloze passage irregular verbs teaching resources - Dec 09 2022
web 10 top cloze passage irregular verbs teaching resources curated for you base verbs fill the gaps differentiated worksheet 4 9 146 reviews

irregular verbs learnenglish learnenglish british council - Jun 15 2023
web the rules are explained at the top of this page for most verbs which we call regular verbs we add ed or d to the end of the base form work becomes worked play becomes played escape becomes escaped the past forms for irregular verbs are not regular you just have to learn them

conjugation close conjugate verb close reverso conjugator - Jul 16 2023
web conjugate the english verb close indicative past tense participle present perfect gerund conjugation models and irregular verbs translate close in context with examples of use and definition

tenses cloze passage teacher made download and print - Feb 11 2023
web with a mixture of regular and irregular past tense verbs this tenses cloze passage is ideal for helping children to understand how to use the past tense they ll enjoy completing the sentences and when they ve finished the cloze activity they can also have some fun colouring in the pictures

esl teacher resources job boards and worksheets - Apr 13 2023
web irregular past tense verbs cloze fill in the blanks below with one of the 15 irregular past tense verbs in the box ate came did drank gave got made met ran read saw swam took went rode 1 he his homework before he went to school 2 it was cold so we some hot chocolate

charday irregular past tense verbs cloze blogger - Feb 28 2022
web jun 16 2014 irregular past tense verbs cloze fill in the blanks below with one of the 15 irregular past tense verbs in the box began blew bought brought caught drew grew heard knew said sang sat sent slept threw 1 last year we grew carrots and tomatoes in our garden 2 she threw the ball to her friend 3 the wind blew the

irregular past tense cloze worksheet twinkl teacher made - Aug 17 2023
web provide students with in context opportunities to apply their knowledge of verb tenses this cloze worksheet allows students to change present tense verbs to past tense irregular verbs within the context of a recount this resource is differentiated to

past tense verbs cloze teaching resources tpt - May 02 2022
web irregular past tense english verbs cloze activity by blooming bilinguals 4 8 13 1 00 word document file this is a cloze activity where students must change the infinitive verb to its irregular past tense form this is in english subjects efl esl eld grammar spelling grades 2nd 5th types worksheets add to cart wish list

esl teacher resources job boards and worksheets - Aug 05 2022
web irregular past tense verbs cloze fill in the blanks below with one of the 15 irregular past tense verbs in the box bit chose felt found held kept left meant paid quit sold shut spent told wore 1 lucky me i some money on the ground 2 he his comic book collection to a friend for 20 00
teaching past tense irregular verbs worksheets and activities - Jan 10 2023
web verb list become became bite bit break broke choose chose drive drove fall fell feel felt fly flew fight fought find found hold held hide hid hit hit keep kept leave left lose lost mean meant pay paid put put quit quit shut shut sell sold spend spent speak spoke stand stood teach taught tell told win won wear wore
irregular past tense english verbs cloze activity tpt - Oct 07 2022
web this is a cloze activity where students must change the infinitive verb to its irregular past tense form this is in english irregular past tense english verbs cloze activity
esl teacher resources job boards and worksheets - Jan 30 2022
web irregular past tense verbs cloze fill in the blanks below with one of the 15 irregular past tense verbs in the box bent burnt cost cut dreamt fit hurt leapt lent lit rose shook slid stank stuck 1 last night i i was flying 2 the garbage so i took it outside 3 the new bridge a lot of money
simple past cloze test teacher corner - May 14 2023
web regular irregular verbs cloze past tense 2 pdf regular irregular verbs cloze past tense 3 pdf irregular verbs cloze past tense 8 pdf regular irregular verbs cloze past tense 4 pdf
101 irregular verbs past tense in english woodward english - Sep 06 2022
web 101 irregular verbs past tense in english the following is a list of 101 irregular verbs in the past tense with example sentences in english present tense past tense example sentence be was were they were happy the boy was tired
esl teacher resources job boards and worksheets - Jun 03 2022
web irregular past tense verbs cloze fill in the blanks below with one of the 15 irregular past tense verbs in the box began blew bought brought caught drew grew heard knew said sang sat sent slept threw 1 last year we carrots and tomatoes in our garden 2 she the ball to her friend