ILLUSTRATED CONTENTS

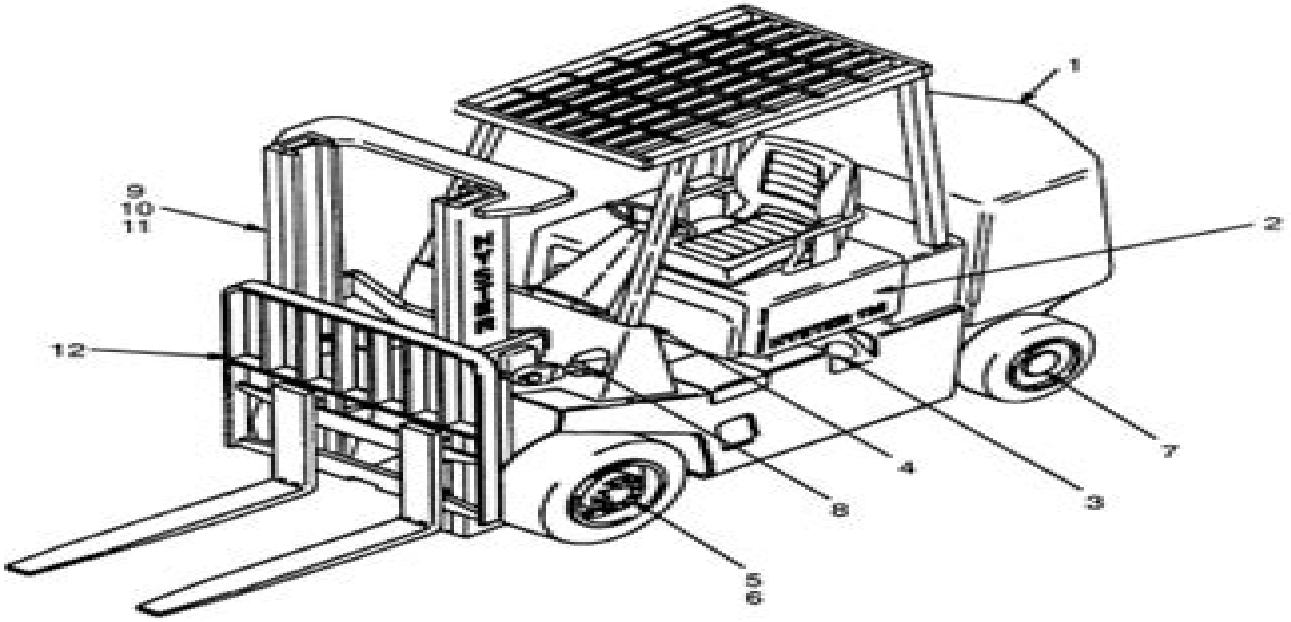

REF	SECTION	PAGE
1	FRAME	1
2	ENGINE	21
3	FUEL	127
4	ELECTRICAL	185
5	TRANSMISSION	303
6	BRAKE	343
7	STEERING	355
8	HYDRAULICS	375
9	TWO-STAGE LIMITED FREE LIFT MAST (A510)	401
10	THREE-STAGE FULL FREE LIFT MAST (A511)	421
11	TWO-STAGE FULL FREE LIFT MAST (A512)	447
12	OPTIONAL EQUIPMENT	477
13	NUMERICAL INDEX	531

Hyster S120xl Parts Manual

Daniela Niemeyer

Hyster S120xl Parts Manual:

Hyster Parts Manual ,1995 Parts Manual ,1995 **Hyster Service Manual: Spacesaver S60B, S70B, S80B, S100B and Challenger H60C, H70C, H80C, H100C, H120C (fork Lift Trucks).** Hyster Company,1975 Parts Book and Instruction Manual for Hyster D4N Towing Winch for Caterpillar D4 and R4 Tractors, Tractor Model Serial Numbers 6G-2076 and Up, 7J-9215 and Up Hyster Co,1955 **Parts Manual** ,1980 **Parts Manual** , **The Hollander Auto-truck Parts Interchange Manual** ,1978 *Master Parts Manual* Tecumseh Products Company. Engine and Gear Service Division,1982 **Suzuki Carry Da63t English Factory Parts Manual** James Danko,2014-11-15 Suzuki Carry DA63T English Factory Parts Manual Over 360 pages of illustrations and part numbers for every part on the Suzuki DA63T Truck A must for repairing your Suzuki DA63T series vehicle Easy to use broken down into six easy to read sections Engine Transmission Driveline Electrical components Suspension Brakes Body Chassis and Air Conditioning Includes component replacement labor times for repair garages All vehicle option parts included in this handy manual A must have for the professional to rebuild components locate parts or reference for all components on the DA63T You can also order parts by following the links in the back of the book **Clark Parts Manual C500** Clark Equipment Company. Industrial Truck Division,1982

The book delves into Hyster S120xl Parts Manual. Hyster S120xl Parts Manual is an essential topic that must be grasped by everyone, ranging from students and scholars to the general public. The book will furnish comprehensive and in-depth insights into Hyster S120xl Parts Manual, encompassing both the fundamentals and more intricate discussions.

1. The book is structured into several chapters, namely:
    - Chapter 1: Introduction to Hyster S120xl Parts Manual
    - Chapter 2: Essential Elements of Hyster S120xl Parts Manual
    - Chapter 3: Hyster S120xl Parts Manual in Everyday Life
    - Chapter 4: Hyster S120xl Parts Manual in Specific Contexts
    - Chapter 5: Conclusion
2. In chapter 1, the author will provide an overview of Hyster S120xl Parts Manual. This chapter will explore what Hyster S120xl Parts Manual is, why Hyster S120xl Parts Manual is vital, and how to effectively learn about Hyster S120xl Parts Manual.
3. In chapter 2, this book will delve into the foundational concepts of Hyster S120xl Parts Manual. This chapter will elucidate the essential principles that need to be understood to grasp Hyster S120xl Parts Manual in its entirety.
4. In chapter 3, this book will examine the practical applications of Hyster S120xl Parts Manual in daily life. This chapter will showcase real-world examples of how Hyster S120xl Parts Manual can be effectively utilized in everyday scenarios.
5. In chapter 4, this book will scrutinize the relevance of Hyster S120xl Parts Manual in specific contexts. The fourth chapter will explore how Hyster S120xl Parts Manual is applied in specialized fields, such as education, business, and technology.
6. In chapter 5, the author will draw a conclusion about Hyster S120xl Parts Manual. This chapter will summarize the key points that have been discussed throughout the book.

This book is crafted in an easy-to-understand language and is complemented by engaging illustrations. It is highly recommended for anyone seeking to gain a comprehensive understanding of Hyster S120xl Parts Manual.

https://staging.conocer.cide.edu/book/Resources/Download_PDFS/holt_rinehart_winston_modern_biology_study_guide_answers.pdf

Table of Contents Hyster S120xl Parts Manual

1. Understanding the eBook Hyster S120xl Parts Manual
    - The Rise of Digital Reading Hyster S120xl Parts Manual
    - Advantages of eBooks Over Traditional Books
2. Identifying Hyster S120xl Parts Manual
    - Exploring Different Genres
    - Considering Fiction vs. Non-Fiction
    - Determining Your Reading Goals
3. Choosing the Right eBook Platform
    - Popular eBook Platforms
    - Features to Look for in an Hyster S120xl Parts Manual
    - User-Friendly Interface
4. Exploring eBook Recommendations from Hyster S120xl Parts Manual
    - Personalized Recommendations
    - Hyster S120xl Parts Manual User Reviews and Ratings
    - Hyster S120xl Parts Manual and Bestseller Lists
5. Accessing Hyster S120xl Parts Manual Free and Paid eBooks
    - Hyster S120xl Parts Manual Public Domain eBooks
    - Hyster S120xl Parts Manual eBook Subscription Services
    - Hyster S120xl Parts Manual Budget-Friendly Options
6. Navigating Hyster S120xl Parts Manual eBook Formats
    - ePub, PDF, MOBI, and More
    - Hyster S120xl Parts Manual Compatibility with Devices
    - Hyster S120xl Parts Manual Enhanced eBook Features
7. Enhancing Your Reading Experience
    - Adjustable Fonts and Text Sizes of Hyster S120xl Parts Manual
    - Highlighting and Note-Taking Hyster S120xl Parts Manual
    - Interactive Elements Hyster S120xl Parts Manual
8. Staying Engaged with Hyster S120xl Parts Manual

- Joining Online Reading Communities
- Participating in Virtual Book Clubs
- Following Authors and Publishers Hyster S120xl Parts Manual

9. Balancing eBooks and Physical Books Hyster S120xl Parts Manual
    - Benefits of a Digital Library
    - Creating a Diverse Reading Collection Hyster S120xl Parts Manual
10. Overcoming Reading Challenges
    - Dealing with Digital Eye Strain
    - Minimizing Distractions
    - Managing Screen Time
11. Cultivating a Reading Routine Hyster S120xl Parts Manual
    - Setting Reading Goals Hyster S120xl Parts Manual
    - Carving Out Dedicated Reading Time
12. Sourcing Reliable Information of Hyster S120xl Parts Manual
    - Fact-Checking eBook Content of Hyster S120xl Parts Manual
    - Distinguishing Credible Sources
13. Promoting Lifelong Learning
    - Utilizing eBooks for Skill Development
    - Exploring Educational eBooks
14. Embracing eBook Trends
    - Integration of Multimedia Elements
    - Interactive and Gamified eBooks

Hyster S120xl Parts Manual Introduction

Hyster S120xl Parts Manual Offers over 60,000 free eBooks, including many classics that are in the public domain. Open Library: Provides access to over 1 million free eBooks, including classic literature and contemporary works. Hyster S120xl Parts Manual Offers a vast collection of books, some of which are available for free as PDF downloads, particularly older books in the public domain. Hyster S120xl Parts Manual : This website hosts a vast collection of scientific articles, books, and textbooks. While it operates in a legal gray area due to copyright issues, its a popular resource for finding various publications. Internet Archive for Hyster S120xl Parts Manual : Has an extensive collection of digital content, including

books, articles, videos, and more. It has a massive library of free downloadable books. Free-eBooks Hyster S120xl Parts Manual Offers a diverse range of free eBooks across various genres. Hyster S120xl Parts Manual Focuses mainly on educational books, textbooks, and business books. It offers free PDF downloads for educational purposes. Hyster S120xl Parts Manual Provides a large selection of free eBooks in different genres, which are available for download in various formats, including PDF. Finding specific Hyster S120xl Parts Manual, especially related to Hyster S120xl Parts Manual, might be challenging as theyre often artistic creations rather than practical blueprints. However, you can explore the following steps to search for or create your own Online Searches: Look for websites, forums, or blogs dedicated to Hyster S120xl Parts Manual, Sometimes enthusiasts share their designs or concepts in PDF format. Books and Magazines Some Hyster S120xl Parts Manual books or magazines might include. Look for these in online stores or libraries. Remember that while Hyster S120xl Parts Manual, sharing copyrighted material without permission is not legal. Always ensure youre either creating your own or obtaining them from legitimate sources that allow sharing and downloading. Library Check if your local library offers eBook lending services. Many libraries have digital catalogs where you can borrow Hyster S120xl Parts Manual eBooks for free, including popular titles.Online Retailers: Websites like Amazon, Google Books, or Apple Books often sell eBooks. Sometimes, authors or publishers offer promotions or free periods for certain books.Authors Website Occasionally, authors provide excerpts or short stories for free on their websites. While this might not be the Hyster S120xl Parts Manual full book , it can give you a taste of the authors writing style.Subscription Services Platforms like Kindle Unlimited or Scribd offer subscription-based access to a wide range of Hyster S120xl Parts Manual eBooks, including some popular titles.

FAQs About Hyster S120xl Parts Manual Books

What is a Hyster S120xl Parts Manual PDF? A PDF (Portable Document Format) is a file format developed by Adobe that preserves the layout and formatting of a document, regardless of the software, hardware, or operating system used to view or print it. **How do I create a Hyster S120xl Parts Manual PDF?** There are several ways to create a PDF: Use software like Adobe Acrobat, Microsoft Word, or Google Docs, which often have built-in PDF creation tools. Print to PDF: Many applications and operating systems have a "Print to PDF" option that allows you to save a document as a PDF file instead of printing it on paper. Online converters: There are various online tools that can convert different file types to PDF. **How do I edit a Hyster S120xl Parts Manual PDF?** Editing a PDF can be done with software like Adobe Acrobat, which allows direct editing of text, images, and other elements within the PDF. Some free tools, like PDFescape or Smallpdf, also offer basic editing capabilities. **How do I convert a Hyster S120xl Parts Manual PDF to another file format?** There are multiple ways to convert a PDF to another format: Use online converters like Smallpdf, Zamzar, or Adobe Acrobats export feature to

convert PDFs to formats like Word, Excel, JPEG, etc. Software like Adobe Acrobat, Microsoft Word, or other PDF editors may have options to export or save PDFs in different formats. **How do I password-protect a Hyster S120xl Parts Manual PDF?** Most PDF editing software allows you to add password protection. In Adobe Acrobat, for instance, you can go to "File" -> "Properties" -> "Security" to set a password to restrict access or editing capabilities. Are there any free alternatives to Adobe Acrobat for working with PDFs? Yes, there are many free alternatives for working with PDFs, such as: LibreOffice: Offers PDF editing features. PDFsam: Allows splitting, merging, and editing PDFs. Foxit Reader: Provides basic PDF viewing and editing capabilities. How do I compress a PDF file? You can use online tools like Smallpdf, ILovePDF, or desktop software like Adobe Acrobat to compress PDF files without significant quality loss. Compression reduces the file size, making it easier to share and download. Can I fill out forms in a PDF file? Yes, most PDF viewers/editors like Adobe Acrobat, Preview (on Mac), or various online tools allow you to fill out forms in PDF files by selecting text fields and entering information. Are there any restrictions when working with PDFs? Some PDFs might have restrictions set by their creator, such as password protection, editing restrictions, or print restrictions. Breaking these restrictions might require specific software or tools, which may or may not be legal depending on the circumstances and local laws.

Find Hyster S120xl Parts Manual :

holt rinehart winston modern biology study guide answers
holt spanish 2 workbook answers vocab 2
holt science spectrum concept review waves answers
holt spanish 2 vocabulario y gramatica answers
homelite st 155 manual
holt spanish 2 chapter 3 workbook answers
~~home vegetable garden planning guide~~
holt science spectrum what is radioactivity 9 quiz
homemade mint chip ice cream recipe
holtna earth science study guide answers
~~holt science and technology test a kntorduction to electrictyanswers~~
holt physics solution manual ch 17
homemade dog bone recipe
holt physics study guide page 104 answers
holt science spectrum a physical approach answers

Hyster S120xl Parts Manual :

loopy loom rubber band animals 25 fun designs for jewelry - Aug 06 2023
web buy loopy loom rubber band animals 25 fun designs for jewelry and accessories by hopping lucy online on amazon ae at best prices fast and free shipping free returns cash on delivery available on eligible purchase
loopy loom rubber band animals 25 fun designs for jewelry - Jun 04 2023
web loopy loom rubber band animals 25 fun designs for jewelry keyrings and accessories by lucy hopping 2015 02 10 on amazon com free shipping on qualifying offers loopy loom rubber band animals 25 fun designs for jewelry keyrings and accessories by lucy hopping 2015 02 10
loopy loom rubber band animals 25 fun designs for jewelry - Dec 18 2021

loopy loom rubber band animals 25 fun designs for jewelry - Dec 30 2022
web apr 1 2015 like making loom bands then you ll love these amazing animals discover how to make 25 cute creatures simply using rubber bands a hook and a loom with five fun chapters cute pets in the garden down on the farm into the wild and under the sea you ll want to start looping straight away
loopy loom rubber band animals 25 fun designs for jewelry - Jul 05 2023
web find helpful customer reviews and review ratings for loopy loom rubber band animals 25 fun designs for jewelry and accessories at amazon com read honest and unbiased product reviews from our users
loopy loom rubber band animals 25 fun designs for jewelry - Oct 28 2022
web loopy loom rubber band animals 25 fun designs for jewelry keyrings and accessories by lucy hopping 2015 02 10 books amazon ca
loopy loom rubber band animals 25 fun designs for jewelry - Apr 02 2023
web buy loopy loom rubber band animals 25 fun designs for jewelry and accessories written by lucy hopping 2015 edition publisher cico books paperback by lucy hopping isbn 8601418417354 from amazon s book store everyday low prices and free delivery on eligible orders
loom bands how to 3d butterflies flowers and notebook loop - Feb 17 2022
web loopy loom rubber band animals 25 fun designs for jewelry and accessories by hopping lucy february 2015 on amazon com free shipping on qualifying offers loopy loom rubber band animals 25 fun designs for jewelry and accessories by hopping lucy february 2015
loopy loom rubber band animals 25 fun designs for jewelry - May 23 2022

web 1 day ago loopy loom rubber band animals 25 fun designs for jewelry and a ships from the uk former library book may include library markings used book that is in excellent read more breathe easy returns accepted 7 00economy delivery see
loopy loom rubber band animals 25 fun designs for - Sep 07 2023
web discover how to make 25 cute creatures simply using rubber bands a hook and a loom with two fun chapters cute pets and furry friends and into the wild packed full of ideas
amazon in loom band - Jan 19 2022

loopy loom rubber band animals 25 fun designs for jewelry - Jan 31 2023
web loopy loom rubber band animals 25 fun designs for jewelry and accessories hopping lucy amazon in books
loopy loom rubber band animals 25 fun designs for jewelry - Aug 26 2022
web find many great new used options and get the best deals for loopy loom rubber band animals 25 fun designs for jewelry and accessories by lucy hopping 2015 trade paperback at the best online prices at ebay free shipping for many products
loopy loom rubber band animals 25 fun designs for jewelry - Jun 23 2022
web discover how to make 25 cute creatures simply using rubber bands a hook and a loom with two fun chapters amp 8211 amp 8220cute pets and furry friends amp 8221 and amp 8220into the wild amp 8221 amp 8211 packed full of ideas you amp 8217ll want to start looping straight away
loopy loom rubber band animals 25 fun designs for - Oct 08 2023
web loopy loom rubber band animals 25 fun designs for jewelry and accessories hopping lucy 9781782491835 books amazon ca
loopy loom rubber band animals 25 fun designs for jewelry - Sep 26 2022
web discover 25 awesome animals all made from rubber bands like making loom bands then you ll lo loopy loom rubber band animals 25 fun designs for jewelry and accessories by lucy hopping goodreads
amazon com customer reviews loopy loom rubber band - May 03 2023
web buy loopy loom rubber band animals 25 fun designs for jewelry keyrings and accessories by lucy hopping 2015 02 10 by isbn from amazon s book store everyday low prices and free delivery on eligible orders
full download pdf loopy loom rubber band animals - Apr 21 2022
web notebook loop hook a yellow band onto a fork prong twist this band and hook it onto the next prong repeat step 2 two more times repeat steps 1 3 with a purple band using the hook tool pull the yellow loops over the purple loops and over the top of the prongs repeat steps 1 3 with a green band repeat step 5 with the colours now on the fork
loopy loom rubber band animals 25 fun designs for - Mar 01 2023

web abebooks com loopy loom rubber band animals 25 fun designs for jewelry and accessories 9781782491835 by hopping lucy and a great selection of similar new used and collectible books available now at great prices

loopy loom rubber band animals 25 fun designs for jewelry - Mar 21 2022

web loom bands huge premium rubber band bracelet kit 11000 vibrant rainbow color bands 600 s clips 200 beads 30 pvc charms 52 abc beads 10 backpack hooks 5 crochet tassels hair clips 2y loom 936 5 98970 get it wednesday 27 september thursday 28 september more buying choices

loopy loom rubber band animals 25 fun designs for jewe - Jul 25 2022

web oct 27 2023 find many great new used options and get the best deals for loopy loom rubber band animals 25 fun designs for jewelry and accessories at the best online prices at ebay free shipping for many products

loopy loom rubber band animals 25 fun designs for jewelry - Nov 28 2022

web buy loopy loom rubber band animals 25 fun designs for jewelry and accessories by lucy hopping online at alibris we have new and used copies available in 1 editions starting at 2 00 shop now

schaum s outline of signals and systems fourth edition - Apr 07 2022

web feb 5 2020 schaum s outline of signals and systems fourth edition is packed hundreds of examples solved problems and practice exercises to test your skills this updated guide approaches the subject in a more concise ordered manner than most standard texts which are often filled with extraneous material

schaum s outline of signals and systems 3rd edition schaum s outlines - Feb 17 2023

web buy schaum s outline of signals and systems 3rd edition schaum s outlines 3 by hsu hwei isbn 9780071829465 from amazon s book store everyday low prices and free delivery on eligible orders schaum s outline of signals and systems 3rd edition schaum s outlines amazon co uk hsu hwei 9780071829465 books

schaum s outline of signals and systems 3ed edition 3 google play - Mar 18 2023

web download for offline reading highlight bookmark or take notes while you read schaum s outline of signals and systems 3ed edition 3 edition 3 ebook written by hwei p hsu read this book using google play books app on your pc android ios devices

schaum s outline of signals and systems 3rd edition - Feb 05 2022

web jun 25 2014 support for all the major textbooks for signals and systems courses fully compatible with your classroom text schaum s highlights all the important facts you need to know use schaum s to shorten your study time and get your best test scores schaum s outlines problem solved

schaum s outline of signals and systems 3rd edition schaum s outlines - Jun 21 2023

web schaum s outline of signals and systems 3rd edition schaum s outlines hsu hwei amazon com tr kitap kitap

schaumâ s outline of signals and systems 3rd edition - Jan 04 2022
web dec 9 2013 coupon rent schaumâ s outline of signals and systems 3rd edition 3rd edition by hsu ebook 9780071829465 and save up to 80 on online textbooks at chegg com now
schaum s outline of signals and systems 3rd edition schaum s outlines - Aug 11 2022
web schaum s is the key to faster learning and higher grades in every subject each outline presents all the essential course information in an easy to follow topic by topic format you also get hundreds of examples solved problems and practice exercises to test your skills
schaum s outline of signals and systems fourth edition - Nov 02 2021
web open ebook 2 2 response of a continuous time lti system and the convolution integral 2 6 response of a discrete time lti system and convolution sum chapter 3 laplace transform and continuous time lti systems chapter 5 fourier analysis of continuous time signals and systems
schaum s outlines of iran university of science and - Oct 13 2022
web chapter 3 laplace transform and continuous time lti systems 110 3 1 introduction 110 3 2 the laplace transform 110 3 3 laplace transforms of some common signals 114 3 4 properties of the laplace transform 114 3 5 the inverse laplace transform 119 3 6 the system function 121 3 7 the unilateral laplace transform 124 solved problems 127
schaum s outline of signals and systems 3rd edition schaum s outlines - Jan 16 2023
web schaum s outline of signals and systems 3rd edition schaum s outlines by hsu hwei isbn 10 0071829466 isbn 13 9780071829465 mcgraw hill education 2013 softcover
schaum s outline of signals and systems second edition - Jul 10 2022
web aug 27 2010 a classic schaum s outline thoroughly updated to match the latest course scope and sequence the ideal review for the thousands of engineering students who need to know the signals and
schaum s outline of signals and systems 3rd edition - Sep 24 2023
web each outline presents all the essential course information in an easy to follow topic by topic format you also get hundreds of examples solved problems and practice exercises to test your skills this schaum s outline gives you 571 fully solved problems bonus material on matrix theory and complex numbers
schaum s outline of signals and systems fourth edition - May 08 2022
web schaum s outline of signals and systems fourth edition is packed hundreds of examples solved problems and practice exercises to test your skills this updated guide approaches the subject in a more concise ordered manner than most standard texts which are often filled with extraneous material
schaum s outline of signals and systems 3rd edition schaum s outlines - Jul 22 2023

web dec 9 2013 schaum s outline of signals and systems 3rd edition schaum s outlines 3rd edition schaum s outline of signals and systems 3rd edition schaum s outlines 3rd edition by hwei hsu author 4 6

schaum s outline of signals and systems 3rd edition - Nov 14 2022

web nov 18 2013 1 signals and systems 2 linear time invariant systems 3 laplace transform and continuous time lti systems 4 the z transform and discrete time lti systems 5 fourier analysis of continuous time signals and systems 6 fourier analysis of discrete time signals and systems 7 state space analysis 8 review of matrix

schaum s outline of signals and systems 3ed google books - Aug 23 2023

web nov 8 2013 schaum s outline of signals and systems 3ed schaum s outline series author hwei p hsu edition 3 publisher mcgraw hill professional 2013 isbn 0071829474 9780071829472 length

schaum s outline of signals and systems 3rd edition - Mar 06 2022

web this schaum s outline of signals and systems 3rd edition as one of the most dynamic sellers here will extremely be among the best options to review schaum s outlines signals and systems hwei piao hsu 2010

schaum s outline of signals and systems 4th edition - Jun 09 2022

web schaum s outline of signals and systems fourth edition is packed hundreds of examples solved problems and practice exercises to test your skills this updated guide approaches the subject in a more concise ordered manner than most standard texts which are often filled with extraneous material

schaum s outline of signals and systems 3rd edition - Apr 19 2023

web 2 1 introduction 2 2 response of a continuous time lti system and the convolution integral 2 3 properties of continuous time lti systems 2 4 eigenfunctions of continuous time lti systems 2 5 systems described by differential equations 2 6 response of a discrete time lti system and convolution sum 2 7 properties of discrete time lti

schaumâ s outline of signals and systems 3ed 3rd edition - Dec 15 2022

web nov 8 2013 coupon rent schaumâ s outline of signals and systems 3ed 3rd edition by hsu ebook 9780071829472 and save up to 80 on online textbooks at chegg com now

schaum s outline of signals and systems 3rd edition - May 20 2023

web dec 9 2013 this schaum s outline gives you 571 fully solved problems bonus material on matrix theory and complex numbers support for all the major textbooks for signals and systems courses fully compatible with your classroom text schaum s highlights all the important facts you need to know

schaum s outline of signals and systems 3ed schaum s outlines 3rd - Dec 03 2021

web nov 8 2013 schaum s outline of signals and systems 3ed schaum s outlines kindle edition by hsu hwei p download it once and read it on your kindle device pc phones or tablets use features like bookmarks note taking and highlighting while

reading schaum s outline of signals and systems 3ed schaum s outlines

pdf schaum s outline of signals and systems academia edu - Sep 12 2022

web schaum s outline of signals and systems tatiana leon estudio de tratamiento de señales see full pdf download pdf see full pdf download pdf related papers schaums signals and systems arturo cs download free pdf view pdf schaum s outlines of signals systems ripped by sabbanji alejandru camilo fuentes

□□ □ □ □□ □ □ □□□ □ □ □ □ □ □ □ □ □ □□ □ □□ sarita - Jun 02 2023

web feb 10 2023 □ □ □□□ □□□ □ □ □□□ □□ □ □ □□□ □ □□ □ □□ □ □ □ □ □□ □ □ □□ □ □ □□□ □ □ □ □□ □ □ □ □ □ □□□ □ □□ □ □□ □ □□ □ □□

nangi photo with gandi kahani pdf discover designlights - Apr 19 2022

web 4 4 nangi photo with gandi kahani 2022 06 09 these lively and engaging interviews cover benegal s life and work and in doing so present a history of indian cinema

gandi kahani facebook - Jul 23 2022

web page health beauty not yet rated 0 reviews photos see all photos gandi kahani 5h shared with public follow my page romantic gandireel viralreels fbreelsvideo reelsvideo hindimovie hindisong storywakekinian realgandikahani urdugandikahani sexyblackmen hindidubbed sexy like comment 0 comments

3 500 gandi pics stock photos pictures royalty free images - Nov 26 2022

web image adapted from indian currency gandi pics stock pictures royalty free photos images union major general george h thomas engraving of mohandas karamchand gandhi 2 october 1869 â 30 january 1948 commonly known as mahatma gandhi who was the preeminent leader of indian nationalism in british ruled india

1 385 gandi images stock photos 3d objects vectors - Oct 26 2022

web gandhi jayanti mahatma gandhi david gandy banknote rupee indian independence movement of 14 find gandi stock images in hd and millions of other royalty free stock photos 3d objects illustrations and vectors in the shutterstock collection thousands of new high quality pictures added every day

gandi kahani with image - Dec 28 2022

web images about urdu kahani gandi including images pictures photos wallpapers and more in these page we also have variety of images available such as png jpg animated gifs pic art logo

sexyy story hindi me □ □ □ □ □ □ □□ □□ □ □ stahuj cz - Sep 05 2023

web sexyy story hindi me with audio is a collection of story related to high maturity content in hindi and many part of hindi desi romantic story part you can browse several real user generated hindi desi romantic stories desi sexy kahaniya hindi desi romantic kahani hindi desi story contain in this application

gandi kahani with photos whoownes com - Mar 19 2022

web andaz e bayan dil ki kahani lafzon ki zubani gandi net gandi net domain names web hosting ssl certificates greggandy com greg gandy fine art lebardegandi net gandi news domain names and hosting photosretouchingservices com photo retouching online photo processing digital photo retouching free photo retouching service

gandi kahani with photo accounts ceu social - Feb 15 2022

web sep 28 2023 gandi kahani with photo gandi kahani with photo 2 downloaded from accounts ceu social on 2019 12 09 by guest business trip with a famously fiery reporter rajesh lagheri he s travelling to a business conference for a story and doesn t seem impressed by her involvement but as soon as they re out of the office things change

2 behny aur ek bhai ki kahani aarif patel aur vo facebook - Feb 27 2023

web aarif patel aur vo august 8 2016 2 behny aur ek bhai ki kahani hello mera naam sunayana h or me haryana ki rahne wali hu ye story meri or mere bade bhai anil ki or ye sachi kahani h ab m aap ko apne or apne parivar ke bare me btati hu humari join family h jis me mere tau ji tayi ji or un ka

funny gandi kahani whoownes com - Aug 24 2022

web andaz e bayan dil ki kahani lafzon ki zubani deshmere blogspot in □ □ □□ □ □ □□ □□ □ □ afunnyanimal blogspot com funny animal obstacol com funny pictures funny images funny quotes just a funny websitefunny pictures funny images funny quotes just a funny website 4funnies com

gandi kahani and photo ncf ec2 west 02 xconvert com - Sep 24 2022

web 4 gandi kahani and photo 2021 08 20 who greeted kings and paupers alike who walked 240 miles at the age of sixty to break the salt law and whose entire life was dedicated to truth and to peace even today as we read inspirational accounts of gandhiji s life and talk of gandhigiri we know that his ideals are alive and relevant to today s

hindi audio sex story kirayedar ladkon chut gand - Aug 04 2023

web feb 20 2018 volume 90 1 29 hindi audio sex story kirayedar ladkon chut gand 08 03 hindi audio sex story kirayedar ladkon chut gand topics bhabhi ki chudai hindi sexy story audio sex stories antarvasnamp3 bhabi ko choda hindisex bhabhi ki chut kamukta □ □ □ □ □ □□□ □

urdu gandi kahani urdu moral story heart touching story - Mar 31 2023

web apr 23 2022 i try to keep my audience amuse with different moral emotional islamic and heart touching stories keep watching muskan kahani center please subscribe muskan kahani center urdu kahaniya

aamer mughal ki baji ki gandi story pakistani real story - Jul 03 2023

web by pk on september 25 2015 in behan ki chudai ki sachi kahaniyan pakistani and inden sexy stories pakistani gandi kahani urdu kahani hi mera naam maya hai main aamer mughal ki behan hun or me pichle 4 saal se rakhail hoon best ki larkiyan do waja se rakhail banti hain ek ye k un ko ye sub acha lagta hai ya doosri waja ye k un ko

femina in - Jan 29 2023
web apr 4 2017

gandi kahani moral story hindi stories gandi - Oct 06 2023
web jun 17 2021 gandi kahani moral story hindi stories gandi kahaniyan hindi sexy kahaniyan short stories hindi khahniya

18 hindi 18 stories storymirror - May 01 2023
web 18

odia gandi kahani with pictures whoownes com - Jun 21 2022
web online picture frames picture frames digital picture frame online picture effects photo effects online digital frame frame a picture online photo frame picture frames online online picture frame online frames frame pictures frame pictures gandi net gandi net domain names web hosting ssl certificates

urdu gandi kahani with pictures whoownes com - May 21 2022
web urdu gandi kahani with pictures who s behind that website ask us urdu gandi kahani with pictures leads to table settings with pictures com urdu gandi kahani with pictures also relates to urdunovels org free urdu novels urdu stories urdu books romantic urdu novels urdu kahani storiespk com