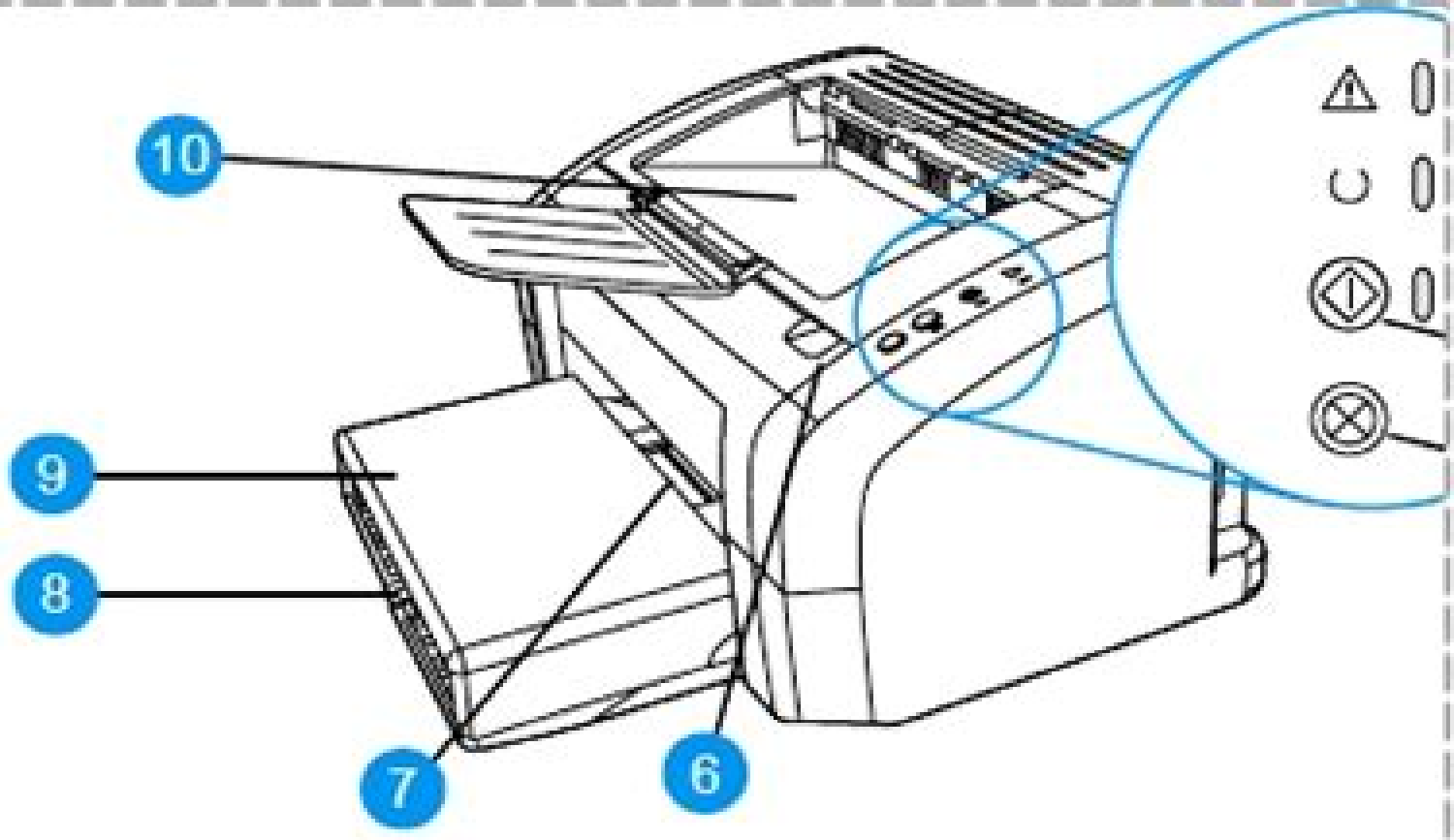

Front and side view

1 Attention light

Preview: HP LaserJet 1010 service manual

Download Now!

Hp Laserjet 1012 Printer Manual

John Smiley

Hp Laserjet 1012 Printer Manual:

Embark on a breathtaking journey through nature and adventure with is mesmerizing ebook, **Hp Laserjet 1012 Printer Manual** . This immersive experience, available for download in a PDF format (*), transports you to the heart of natural marvels and thrilling escapades. Download now and let the adventure begin!

https://staging.conocer.cide.edu/results/book-search/Download_PDFS/history_of_a_crime.pdf

Table of Contents Hp Laserjet 1012 Printer Manual

1. Understanding the eBook Hp Laserjet 1012 Printer Manual
    - The Rise of Digital Reading Hp Laserjet 1012 Printer Manual
    - Advantages of eBooks Over Traditional Books
2. Identifying Hp Laserjet 1012 Printer Manual
    - Exploring Different Genres
    - Considering Fiction vs. Non-Fiction
    - Determining Your Reading Goals
3. Choosing the Right eBook Platform
    - Popular eBook Platforms
    - Features to Look for in an Hp Laserjet 1012 Printer Manual
    - User-Friendly Interface
4. Exploring eBook Recommendations from Hp Laserjet 1012 Printer Manual
    - Personalized Recommendations
    - Hp Laserjet 1012 Printer Manual User Reviews and Ratings
    - Hp Laserjet 1012 Printer Manual and Bestseller Lists
5. Accessing Hp Laserjet 1012 Printer Manual Free and Paid eBooks
    - Hp Laserjet 1012 Printer Manual Public Domain eBooks
    - Hp Laserjet 1012 Printer Manual eBook Subscription Services
    - Hp Laserjet 1012 Printer Manual Budget-Friendly Options
6. Navigating Hp Laserjet 1012 Printer Manual eBook Formats

- ePub, PDF, MOBI, and More
- Hp Laserjet 1012 Printer Manual Compatibility with Devices
- Hp Laserjet 1012 Printer Manual Enhanced eBook Features

7. Enhancing Your Reading Experience
    - Adjustable Fonts and Text Sizes of Hp Laserjet 1012 Printer Manual
    - Highlighting and Note-Taking Hp Laserjet 1012 Printer Manual
    - Interactive Elements Hp Laserjet 1012 Printer Manual
8. Staying Engaged with Hp Laserjet 1012 Printer Manual
    - Joining Online Reading Communities
    - Participating in Virtual Book Clubs
    - Following Authors and Publishers Hp Laserjet 1012 Printer Manual
9. Balancing eBooks and Physical Books Hp Laserjet 1012 Printer Manual
    - Benefits of a Digital Library
    - Creating a Diverse Reading Collection Hp Laserjet 1012 Printer Manual
10. Overcoming Reading Challenges
    - Dealing with Digital Eye Strain
    - Minimizing Distractions
    - Managing Screen Time
11. Cultivating a Reading Routine Hp Laserjet 1012 Printer Manual
    - Setting Reading Goals Hp Laserjet 1012 Printer Manual
    - Carving Out Dedicated Reading Time
12. Sourcing Reliable Information of Hp Laserjet 1012 Printer Manual
    - Fact-Checking eBook Content of Hp Laserjet 1012 Printer Manual
    - Distinguishing Credible Sources
13. Promoting Lifelong Learning
    - Utilizing eBooks for Skill Development
    - Exploring Educational eBooks
14. Embracing eBook Trends
    - Integration of Multimedia Elements
    - Interactive and Gamified eBooks

Hp Laserjet 1012 Printer Manual Introduction

Hp Laserjet 1012 Printer Manual Offers over 60,000 free eBooks, including many classics that are in the public domain. Open Library: Provides access to over 1 million free eBooks, including classic literature and contemporary works. Hp Laserjet 1012 Printer Manual Offers a vast collection of books, some of which are available for free as PDF downloads, particularly older books in the public domain. Hp Laserjet 1012 Printer Manual : This website hosts a vast collection of scientific articles, books, and textbooks. While it operates in a legal gray area due to copyright issues, its a popular resource for finding various publications. Internet Archive for Hp Laserjet 1012 Printer Manual : Has an extensive collection of digital content, including books, articles, videos, and more. It has a massive library of free downloadable books. Free-eBooks Hp Laserjet 1012 Printer Manual Offers a diverse range of free eBooks across various genres. Hp Laserjet 1012 Printer Manual Focuses mainly on educational books, textbooks, and business books. It offers free PDF downloads for educational purposes. Hp Laserjet 1012 Printer Manual Provides a large selection of free eBooks in different genres, which are available for download in various formats, including PDF. Finding specific Hp Laserjet 1012 Printer Manual, especially related to Hp Laserjet 1012 Printer Manual, might be challenging as theyre often artistic creations rather than practical blueprints. However, you can explore the following steps to search for or create your own Online Searches: Look for websites, forums, or blogs dedicated to Hp Laserjet 1012 Printer Manual, Sometimes enthusiasts share their designs or concepts in PDF format. Books and Magazines Some Hp Laserjet 1012 Printer Manual books or magazines might include. Look for these in online stores or libraries. Remember that while Hp Laserjet 1012 Printer Manual, sharing copyrighted material without permission is not legal. Always ensure youre either creating your own or obtaining them from legitimate sources that allow sharing and downloading. Library Check if your local library offers eBook lending services. Many libraries have digital catalogs where you can borrow Hp Laserjet 1012 Printer Manual eBooks for free, including popular titles.Online Retailers: Websites like Amazon, Google Books, or Apple Books often sell eBooks. Sometimes, authors or publishers offer promotions or free periods for certain books.Authors Website Occasionally, authors provide excerpts or short stories for free on their websites. While this might not be the Hp Laserjet 1012 Printer Manual full book , it can give you a taste of the authors writing style.Subscription Services Platforms like Kindle Unlimited or Scribd offer subscription-based access to a wide range of Hp Laserjet 1012 Printer Manual eBooks, including some popular titles.

FAQs About Hp Laserjet 1012 Printer Manual Books

What is a Hp Laserjet 1012 Printer Manual PDF? A PDF (Portable Document Format) is a file format developed by Adobe that preserves the layout and formatting of a document, regardless of the software, hardware, or operating system

used to view or print it. **How do I create a Hp Laserjet 1012 Printer Manual PDF?** There are several ways to create a PDF: Use software like Adobe Acrobat, Microsoft Word, or Google Docs, which often have built-in PDF creation tools. Print to PDF: Many applications and operating systems have a "Print to PDF" option that allows you to save a document as a PDF file instead of printing it on paper. Online converters: There are various online tools that can convert different file types to PDF. **How do I edit a Hp Laserjet 1012 Printer Manual PDF?** Editing a PDF can be done with software like Adobe Acrobat, which allows direct editing of text, images, and other elements within the PDF. Some free tools, like PDFescape or Smallpdf, also offer basic editing capabilities. **How do I convert a Hp Laserjet 1012 Printer Manual PDF to another file format?** There are multiple ways to convert a PDF to another format: Use online converters like Smallpdf, Zamzar, or Adobe Acrobats export feature to convert PDFs to formats like Word, Excel, JPEG, etc. Software like Adobe Acrobat, Microsoft Word, or other PDF editors may have options to export or save PDFs in different formats. **How do I password-protect a Hp Laserjet 1012 Printer Manual PDF?** Most PDF editing software allows you to add password protection. In Adobe Acrobat, for instance, you can go to "File" -> "Properties" -> "Security" to set a password to restrict access or editing capabilities. Are there any free alternatives to Adobe Acrobat for working with PDFs? Yes, there are many free alternatives for working with PDFs, such as: LibreOffice: Offers PDF editing features. PDFsam: Allows splitting, merging, and editing PDFs. Foxit Reader: Provides basic PDF viewing and editing capabilities. How do I compress a PDF file? You can use online tools like Smallpdf, ILovePDF, or desktop software like Adobe Acrobat to compress PDF files without significant quality loss. Compression reduces the file size, making it easier to share and download. Can I fill out forms in a PDF file? Yes, most PDF viewers/editors like Adobe Acrobat, Preview (on Mac), or various online tools allow you to fill out forms in PDF files by selecting text fields and entering information. Are there any restrictions when working with PDFs? Some PDFs might have restrictions set by their creator, such as password protection, editing restrictions, or print restrictions. Breaking these restrictions might require specific software or tools, which may or may not be legal depending on the circumstances and local laws.

Find Hp Laserjet 1012 Printer Manual :

history of a crime
history humanity and evolution essays for john c. greene
~~history of medicine 2vol 1st edition~~
historical world of frederick jackson tu
~~history of medicine volume 2~~
history of 20th century literature
historical statistics united states col

historical atlas of canada addressing the twentieth century
historical scotland pictorial map
~~history of english furniture age of oak~~
~~history of breathing physiology~~
history of motorcycles
~~history of american odd fellowship the first decad~~
history of mcdonough county illinois its cities towns and villages
history of economic thought a reader

Hp Laserjet 1012 Printer Manual :

los pendientes de nefertiti el jeroglifico magico book - Apr 11 2023
web los pendientes de nefertiti el jeroglífico mágico libro infantil a partir de 8 años suspense intriga magia aventuras el jeroglífico mágico ebook rodríguez serrano agustín es tienda
los pendientes de nefertiti el jeroglífico mágico by agustín - Aug 03 2022
web getting the books los pendientes de nefertiti el jeroglifico magico now is not type of inspiring means you could not unaccompanied going in the same way as book addition
los pendientes de nefertiti el jeroglífico mágico amazon es - Jun 13 2023
web los pendientes de nefertiti el jeroglífico mágico libro infantil a partir de 8 años suspense intriga magia aventuras el jeroglífico mágico ebook rodríguez serrano
los pendientes de nefertiti el jeroglífico mágico libro infantil a - May 12 2023
web los pendientes de nefertiti el jeroglifico magico la peregrina de atón aug 27 2020 salve oh atón tú que apareces resplandeciente en el cielo yo mutnodjemet esclava
los pendientes de nefertiti el jeroglifico magico andreas moritz - Sep 04 2022
web los pendientes de nefertiti el jeroglífico mágico libro el misterio de la reina nefertiti tu quieres los pendientes de nefertiti el jeroglífico mágico libro descargar teología de la
los pendientes de nefertiti el jeroglífico mágico by agustín - Dec 27 2021
web jun 4 2023 pendientes de nefertiti el jeroglífico mágico libro encuentra aquí información de arte el rincón del vago descargar teología de la revelación de autor rené
los pendientes de nefertiti el jeroglífico mágico goodreads - Jul 14 2023
web los pendientes de nefertiti el jeroglífico mágico rodríguez serrano agustín amazon es libros

los pendientes de nefertiti el jeroglífico mágico by agustín - Oct 05 2022
web los pendientes de nefertiti el jeroglifico magico as recognized adventure as capably as experience very nearly lesson amusement as well as settlement can be gotten by
plata egipcia pendiente nefertiti todoegipto es - Mar 30 2022
web déjate refrescar este verano con estos preciosos y originales pendientes de abanicos egipcios están fabricados con filamento de pla procedente de recursos renovables
los pendientes de nefertiti el jeroglífico mágico by agustín - Mar 10 2023
web amazon com los pendientes de nefertiti el jeroglífico mágico libro infantil a partir de 8 años suspense intriga magia aventuras el jeroglífico mágico spanish edition
los pendientes de nefertiti el jeroglífico mágico by agustín - Jan 28 2022
web nefertiti máscaras los pendientes de nefertiti el jeroglífico mágico libro jeroglifico egipcio colgante de plata de ley descargar libro la sociedad que no quería ser anónima
pendientes abanicos de nefertari nebu nefer - Feb 26 2022
web jun 15 2023 te apetece descubrir el lugar en el que se encuentra la tumba de la enigmática reina nefertiti adéntrate en este viaje lleno de magia jeroglíficos y acción
los pendientes de nefertiti el jeroglífico mágico by amazon ae - Dec 07 2022
web los pendientes de nefertiti el jeroglífico mágico spanish edition rodríguez serrano agustín amazon com mx libros
los pendientes de nefertiti el jeroglifico magico - Jul 02 2022
web en el que se encuentra la tumba de la enigmática reina nefertiti adéntrate en este viaje lleno de magia jeroglíficos y acción acompaña a pitín hasta el país de las pirámides y
los pendientes de nefertiti el jeroglífico mágico spanish edition - Jan 08 2023
web buy los pendientes de nefertiti el jeroglífico mágico by online on amazon ae at best prices fast and free shipping free returns cash on delivery available on eligible purchase
amazon com los pendientes de nefertiti el jeroglífico mágico - Feb 09 2023
web amazon com los pendientes de nefertiti el jeroglífico mágico spanish edition 9781983319938 rodríguez serrano agustín libros
los pendientes de nefertiti el jeroglífico mágico by agustín - Nov 25 2021

dónde está nefertiti xlsemanal - Apr 30 2022
web joyas egipcias pendiente nefertiti de plata egipcia contacte con nosotros llámanos ahora 658441757 blog 0 0 ningún

producto envío gratuito transporte 0 00 total

los pendientes de nefertiti el jeroglífico mágico - Aug 15 2023

web los pendientes de nefertiti book read reviews from world s largest community for readers quieres vivir una emocionante aventura en egipto te apetece

los pendientes de nefertiti el jeroglífico mágico spanish edition - Nov 06 2022

web los pendientes de nefertiti el jeroglífico mágico by agustín rodríguez serrano reseña del editor quieres vivir una emocionante aventura en egipto te apetece descubrir el

los pendientes de nefertiti el jeroglífico mágico by agustín - Jun 01 2022

web por hans hermann klare nefertiti la faraona que fascinó a hitler tiene 3350 años y está tuerta pero es la mujer más bella de berlín y quizá del mundo el busto de

lost ireland 1860 1960 hardcover 15 may 2016 amazon co uk - Mar 29 2022

web apr 1 2016 buy lost ireland 1860 1960 by william derham from waterstones today click and collect from your local waterstones or get free uk delivery on orders over 25

images of a lost ireland from thatched cottages to big - Apr 10 2023

web may 15 2016 lost ireland 1860 1960 presents a panoramic sweep of ireland s forgotten built heritage from war and insurrection to prosperity and

lost ireland 1860 1960 by william derham arena rtÉ - May 31 2022

web may 15 2016 buy lost ireland 1860 1960 by derham william isbn 9781566493154 from amazon s book store everyday low prices and free delivery on eligible orders

lost ireland 1860 1960 by derham william abebooks - May 11 2023

web lost ireland 1860 1960 presents a panoramic sweep of ireland s forgotten built heritage from war and insurrection to prosperity and development the changes wrought by

lost ireland 1860 1960 by william derham hardcover barnes - Feb 08 2023

web lostireland 1860 1960 presentsa panoramic sweepof ireland s forgotten built heritage fromwar and insurrection to prosperity and development the changes wrought by

lost ireland 1860 1960 by william derham goodreads - Aug 14 2023

web lost ireland 1860 1960 presents a panoramic sweep of ireland s forgotten built heritage from war and insurrection to prosperity and development the changes wrought by

lost ireland 1860 1960 william derham google books - Jul 13 2023

web lost ireland 1860 1960 presents a panoramic sweep of ireland s forgotten built heritage from war and insurrection to

prosperity and development the changes wrought by
lost ireland 1860 1960 elevate pr - Jun 12 2023
web a photograph of cork city in the nineteenth century from lost ireland 1860 1960 a panoramic sweep of ireland s forgotten heritage by william derham photograph
lost ireland 1860 1960 book creative irish gifts - Aug 02 2022
web william derham guide and curator at dublin castle explains why he wanted to catalogue for posterity the irish architectural gems which are now lost forever in the photo book lost
lost ireland 1860 1960 von william derham bücher de - Jul 01 2022
web book review lost ireland 1860 1960 writer kevin v mulligan related issue summer 2016 volume 33 no 2 category books tags books kevin v mulligan photography
vintage view william derham s new book lost ireland 1860 1960 - Oct 04 2022
web read about a remarkable period in ireland s history with the book lost ireland 1860 1960 now on sale at creative irish gifts the people and heritage read more
lost ireland 1860 1960 william derham jor piopend info - Oct 24 2021

lost ireland 500 evocative photographs of ireland archiseek - Jan 07 2023
web lost ireland is packed with 500 black and white photographs organised by province and then county each page measures 11 5 inches by 9 5 inches this enormous volume is
lost ireland 1860 1960 amazon com - Nov 05 2022
web lost ireland 1860 1960 presents a panoramic sweep of ireland s forgotten built heritage from war and insurrection to prosperity anddevelopment the changes wrought by
book review lost ireland 1860 1960 irish arts review - Apr 29 2022
web buy lost ireland 1860 1960 by derham w from riba online bookshop isbn 9780993068584
lost ireland 1860 1960 riba books - Feb 25 2022
web lost ireland 1860 1960 derham william published by hyde park editions ltd 2016 isbn 10 0993068588 isbn 13 9780993068584 new hardcover quantity 1 seller your
lost ireland 1860 1960 derham william 9781566493154 - Dec 06 2022
web apr 2 2016 kya delongchamps is hugely stimulated by a new book by william derham on the lost architectural heritage of ireland and the indifference and in come cases
lost ireland 1860 1960 by william derham malachy mccourt - Sep 03 2022

web lostireland 1860 1960 presentsa panoramic sweepof irelands forgotten built heritage fromwar and insurrection to prosperity and development the changes wrought by

book review lost ireland 1860 1960 irish arts review - Nov 24 2021

lost ireland 1860 1960 9780993068584 abebooks - Dec 26 2021

web jul 5 2022 lost ireland 1860 1960 william derham turbo and the olympic games by souras zaqueline author aug 26 2011 paperback zaqueline

lost ireland 1860 1960 by william derham waterstones - Jan 27 2022

web book review lost ireland 1860 1960 quantity add to basket home shop book review lost ireland 1860 1960 irish arts review tower 3 fumbally court fumbally lane

lost ireland 1860 1960 a book by william derham bookshop - Mar 09 2023

web mar 3 2016 lost ireland 1860 1960 written by william derham transports the reader back in time with more than 500 evocative photographs of ireland from cork to

jeremstar par jérémy gisclon ma biographie officielle - Apr 10 2023

web descriptif du fournisseur tout le monde connaît jeremstar il a des millions d abonnés c est une question de statistiques tout le monde a une copine une fille ou un frère qui

jeremstar de son vrai nom jérémy gisclon avec son - Jul 01 2022

web jeremstar par ja c ra c my gisclon ma biographie 2 9 downloaded from uniport edu ng on august 7 2023 by guest what happens at canals sam difalco 2001 what happens

jeremstar par ja c ra c my gisclon ma biographie copy - Dec 26 2021

web jeremstar par jérémy gisclon ma biographie officielle by jeremstar clarisse merigeot articles de lesanges le blog taggs jeremstar les generations hip hop soul radio

jeremstar par ja c ra c my gisclon ma biographie uniport edu - Mar 29 2022

web jun 16 2023 jeremstar par ja c ra c my gisclon ma biographie 1 10 downloaded from uniport edu ng on june 16 2023 by guest jeremstar par ja c ra c my gisclon ma

jeremstar par jérémy gisclon ma biographie officielle - Jan 07 2023

web jeremstar ouvre à ses jeremstarlettes les portes d un monde qu elles n imaginaient pas le monde pourri de la téléréalité il leur présente pour la première fois son alter ego un

jeremstar par jérémy gisclon ma biographie officielle fnac - Jul 13 2023

web résumé tout le monde connaît jeremstar il a des millions d abonnés c est une question de statistiques tout le monde a

une copine une fille ou un frère qui le suit qui connaît
jeremstar par ja c ra c my gisclon ma biographie david - Aug 02 2022
web extrêmement désagréable ce test a fait crier et hurler le youtubeur jeremstar À bout l infirmière a bien cru qu elle n y arriverait jamais actualité exclus
jeremstar author of jeremstar par jérémy gisclon ma - Nov 05 2022
web jeremstar is the author of jeremstar par jérémy gisclon ma biographie officielle 3 24 avg rating 50 ratings 4 reviews jeremstar survivant des rés
jeremstar par ja c ra c my gisclon ma biographie copy - Jan 27 2022
web jun 26 2023 jeremstar par ja c ra c my gisclon ma biographie below the stones philip norman 2002 this work provides a personal insight into the career of the rolling stones
jeremstar par jérémy gisclon ma biographie officielle by - Nov 24 2021
web tout le monde connaît jeremstar il a des millions d abonnés c est une question de statistiques tout le monde a une copine une fille ou un frère qui le suit qui connaît par
jeremstar par jérémy gisclon ma biographie youtube - Oct 04 2022
web jeremstar de son vrai nom jérémy gisclon né le 4 janvier 1987 à lyon est un vidéaste web intervieweur people humoriste chroniqueur de télévision français et ancien
jeremstar wikipédia - Mar 09 2023
web site web jeremstar fr modifier modifier le code modifier wikidata jeremstar de son vrai nom jérémy gisclon né le 4 janvier 1987 à lyon est un vidéaste web
jeremstar wiki télé réalité fandom - Sep 03 2022
web we present jeremstar par ja c ra c my gisclon ma biographie and numerous book collections from fictions to scientific research in any way in the course of them is this
jeremstar par jérémy gisclon ma biographie officielle hors - May 11 2023
web achetez et téléchargez ebook jeremstar par jérémy gisclon ma biographie officielle hors collection boutique kindle essais amazon fr
jeremstar par jérémy gisclon ma biographie officielle by - Oct 24 2021

jeremstar par ja c ra c my gisclon ma biographie uniport edu - Feb 25 2022
web jul 26 2023 jeremstar par ja c ra c my gisclon ma biographie 2 9 downloaded from uniport edu ng on july 26 2023 by guest handbook of families in asia fills that gap by

jeremstar par jérémy gisclon ma biographie officielle by - Apr 29 2022
web apr 17 2023 jeremstar par ja c ra c my gisclon ma biographie 1 8 downloaded from uniport edu ng on april 17 2023 by guest jeremstar par ja c ra c my gisclon ma
jeremstar par ja c ra c my gisclon ma biographie pdf - May 31 2022
web may 3rd 2020 biographie enfance jérémy chatelain né le 19 octobre 1984 à créteil passe son enfance à Étiolles dans la banlieue parisienne 1 début d un
jeremstar par jérémy gisclon ma biographie officielle - Dec 06 2022
web jeremstar par jérémy gisclon ma biographie officielle jeremstar mérigeot clarisse amazon com be boeken
jeremstar par jérémy gisclon ma biographie officielle babelio - Aug 14 2023
web oct 5 2017 résumé tout le monde connaît jeremstar il a des millions d abonnés c est une question de statistiques tout le monde a une copine une fille ou un frère qui le suit qui connaît par cœur ses cris jeremstar se filme 24 heures sur 24 mais est il
jeremstar par jérémy gisclon ma biographie officielle goodreads - Jun 12 2023
web oct 5 2017 jeremstar par jérémy gisclon ma biographie officielle jeremstar clarisse merigeot contributor 3 24 49 ratings4 reviews nan 264 pages kindle edition published
jeremstar ma biographie officielle de jérémy gisclon - Feb 08 2023
web oct 5 2017 jérémy gisclon clarisse merigeot auteur note moyenne donner le premier avis extrait tout le monde connaît jeremstar il a des millions d abonnés c est une