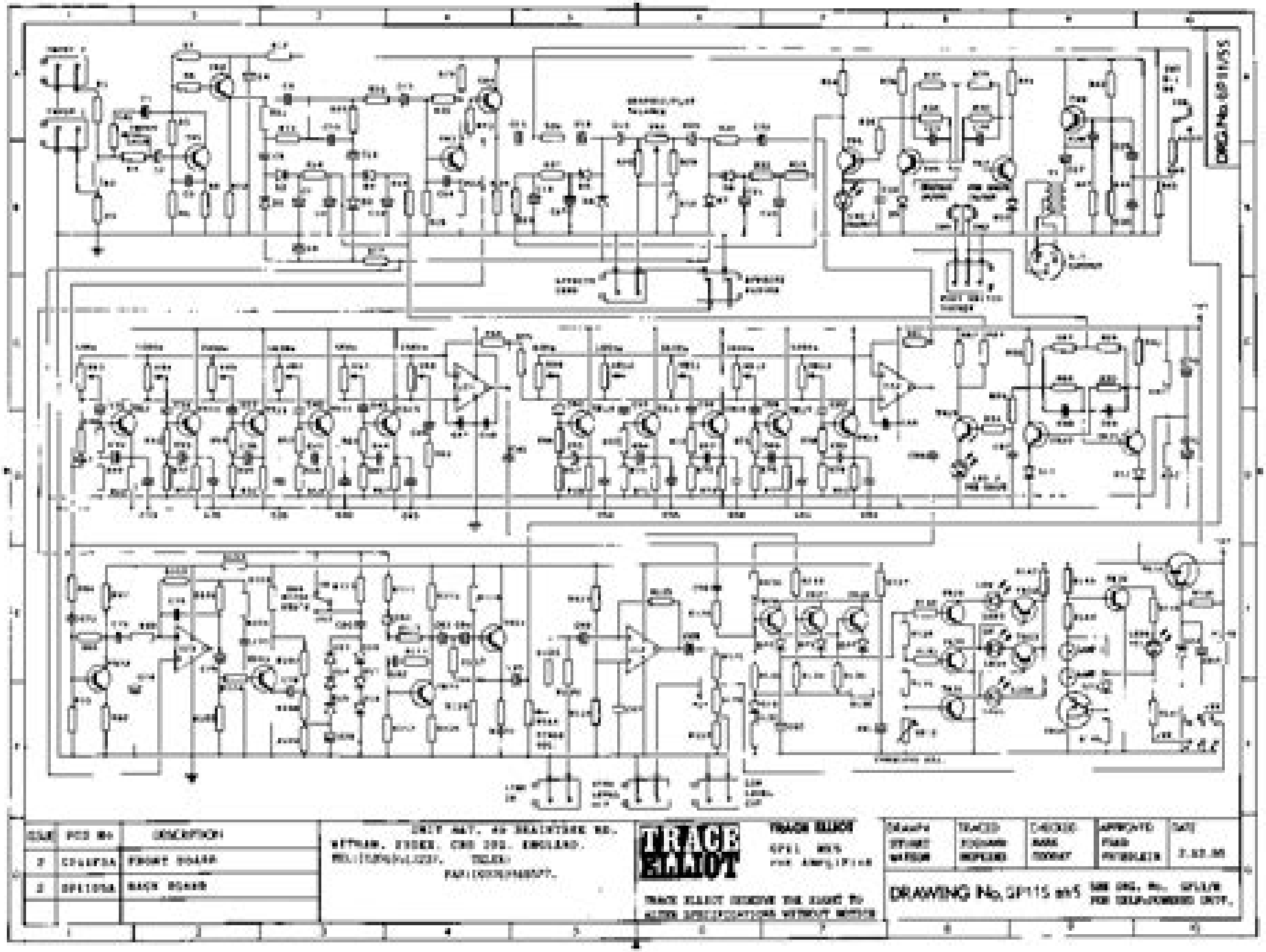
DRG.No.SP115/S5
ISSUE
PCB No
DESCRIPTION
2
FRONT BOARD
2
BACK BOARD
TRACE ELLIOT
TRACE ELLIOT
SP11 MK5
FOR AMPLIFIER
TRACE ELLIOT RESERVE THE RIGHT TO ALTER SPECIFICATIONS WITHOUT NOTICE
DRAWING No. SP115 mk5
SEE DRG. No. SP11/S
FOR DEEP-POWERED UNIT.

Http Servicemanual Info Trace Elliot Ah 350 Sm Owners Manual Html

JA Banks

Http Servicemanual Info Trace Elliot Ah 350 Sm Owners Manual Html:

Whispering the Techniques of Language: An Psychological Quest through **Http Servicemanual Info Trace Elliot Ah 350 Sm Owners Manual Html**

In a digitally-driven world where displays reign supreme and quick communication drowns out the subtleties of language, the profound secrets and mental nuances concealed within phrases usually go unheard. Yet, situated within the pages of **Http Servicemanual Info Trace Elliot Ah 350 Sm Owners Manual Html** a charming literary treasure pulsing with raw thoughts, lies a fantastic journey waiting to be undertaken. Written by an experienced wordsmith, that charming opus encourages readers on an introspective trip, softly unraveling the veiled truths and profound affect resonating within the fabric of every word. Within the psychological depths of this moving review, we will embark upon a heartfelt exploration of the book is primary subjects, dissect their charming publishing design, and fail to the powerful resonance it evokes deep within the recesses of readers hearts.

https://staging.conocer.cide.edu/results/detail/default.aspx/glencoe_world_history_test_answers.pdf

Table of Contents Http Servicemanual Info Trace Elliot Ah 350 Sm Owners Manual Html

1. Understanding the eBook Http Servicemanual Info Trace Elliot Ah 350 Sm Owners Manual Html
    - The Rise of Digital Reading Http Servicemanual Info Trace Elliot Ah 350 Sm Owners Manual Html
    - Advantages of eBooks Over Traditional Books
2. Identifying Http Servicemanual Info Trace Elliot Ah 350 Sm Owners Manual Html
    - Exploring Different Genres
    - Considering Fiction vs. Non-Fiction
    - Determining Your Reading Goals
3. Choosing the Right eBook Platform
    - Popular eBook Platforms
    - Features to Look for in an Http Servicemanual Info Trace Elliot Ah 350 Sm Owners Manual Html
    - User-Friendly Interface
4. Exploring eBook Recommendations from Http Servicemanual Info Trace Elliot Ah 350 Sm Owners Manual Html

- Personalized Recommendations
- Http Servicemanual Info Trace Elliot Ah 350 Sm Owners Manual Html User Reviews and Ratings
- Http Servicemanual Info Trace Elliot Ah 350 Sm Owners Manual Html and Bestseller Lists

5. Accessing Http Servicemanual Info Trace Elliot Ah 350 Sm Owners Manual Html Free and Paid eBooks
   - Http Servicemanual Info Trace Elliot Ah 350 Sm Owners Manual Html Public Domain eBooks
   - Http Servicemanual Info Trace Elliot Ah 350 Sm Owners Manual Html eBook Subscription Services
   - Http Servicemanual Info Trace Elliot Ah 350 Sm Owners Manual Html Budget-Friendly Options
6. Navigating Http Servicemanual Info Trace Elliot Ah 350 Sm Owners Manual Html eBook Formats
   - ePub, PDF, MOBI, and More
   - Http Servicemanual Info Trace Elliot Ah 350 Sm Owners Manual Html Compatibility with Devices
   - Http Servicemanual Info Trace Elliot Ah 350 Sm Owners Manual Html Enhanced eBook Features
7. Enhancing Your Reading Experience
   - Adjustable Fonts and Text Sizes of Http Servicemanual Info Trace Elliot Ah 350 Sm Owners Manual Html
   - Highlighting and Note-Taking Http Servicemanual Info Trace Elliot Ah 350 Sm Owners Manual Html
   - Interactive Elements Http Servicemanual Info Trace Elliot Ah 350 Sm Owners Manual Html
8. Staying Engaged with Http Servicemanual Info Trace Elliot Ah 350 Sm Owners Manual Html
   - Joining Online Reading Communities
   - Participating in Virtual Book Clubs
   - Following Authors and Publishers Http Servicemanual Info Trace Elliot Ah 350 Sm Owners Manual Html
9. Balancing eBooks and Physical Books Http Servicemanual Info Trace Elliot Ah 350 Sm Owners Manual Html
   - Benefits of a Digital Library
   - Creating a Diverse Reading Collection Http Servicemanual Info Trace Elliot Ah 350 Sm Owners Manual Html
10. Overcoming Reading Challenges
    - Dealing with Digital Eye Strain
    - Minimizing Distractions
    - Managing Screen Time
11. Cultivating a Reading Routine Http Servicemanual Info Trace Elliot Ah 350 Sm Owners Manual Html
    - Setting Reading Goals Http Servicemanual Info Trace Elliot Ah 350 Sm Owners Manual Html
    - Carving Out Dedicated Reading Time
12. Sourcing Reliable Information of Http Servicemanual Info Trace Elliot Ah 350 Sm Owners Manual Html

- Fact-Checking eBook Content of Http Servicemanual Info Trace Elliot Ah 350 Sm Owners Manual Html
- Distinguishing Credible Sources

13. Promoting Lifelong Learning
    - Utilizing eBooks for Skill Development
    - Exploring Educational eBooks
14. Embracing eBook Trends
    - Integration of Multimedia Elements
    - Interactive and Gamified eBooks

Http Servicemanual Info Trace Elliot Ah 350 Sm Owners Manual Html Introduction

In this digital age, the convenience of accessing information at our fingertips has become a necessity. Whether its research papers, eBooks, or user manuals, PDF files have become the preferred format for sharing and reading documents. However, the cost associated with purchasing PDF files can sometimes be a barrier for many individuals and organizations. Thankfully, there are numerous websites and platforms that allow users to download free PDF files legally. In this article, we will explore some of the best platforms to download free PDFs. One of the most popular platforms to download free PDF files is Project Gutenberg. This online library offers over 60,000 free eBooks that are in the public domain. From classic literature to historical documents, Project Gutenberg provides a wide range of PDF files that can be downloaded and enjoyed on various devices. The website is user-friendly and allows users to search for specific titles or browse through different categories. Another reliable platform for downloading Http Servicemanual Info Trace Elliot Ah 350 Sm Owners Manual Html free PDF files is Open Library. With its vast collection of over 1 million eBooks, Open Library has something for every reader. The website offers a seamless experience by providing options to borrow or download PDF files. Users simply need to create a free account to access this treasure trove of knowledge. Open Library also allows users to contribute by uploading and sharing their own PDF files, making it a collaborative platform for book enthusiasts. For those interested in academic resources, there are websites dedicated to providing free PDFs of research papers and scientific articles. One such website is Academia.edu, which allows researchers and scholars to share their work with a global audience. Users can download PDF files of research papers, theses, and dissertations covering a wide range of subjects. Academia.edu also provides a platform for discussions and networking within the academic community. When it comes to downloading Http Servicemanual Info Trace Elliot Ah 350 Sm Owners Manual Html free PDF files of magazines, brochures, and catalogs, Issuu is a popular choice. This digital publishing platform hosts a vast collection of publications from around the world. Users can search for specific titles or explore various categories and genres. Issuu offers a seamless reading experience with its user-friendly interface

and allows users to download PDF files for offline reading. Apart from dedicated platforms, search engines also play a crucial role in finding free PDF files. Google, for instance, has an advanced search feature that allows users to filter results by file type. By specifying the file type as "PDF," users can find websites that offer free PDF downloads on a specific topic. While downloading Http Servicemanual Info Trace Elliot Ah 350 Sm Owners Manual Html free PDF files is convenient, its important to note that copyright laws must be respected. Always ensure that the PDF files you download are legally available for free. Many authors and publishers voluntarily provide free PDF versions of their work, but its essential to be cautious and verify the authenticity of the source before downloading Http Servicemanual Info Trace Elliot Ah 350 Sm Owners Manual Html. In conclusion, the internet offers numerous platforms and websites that allow users to download free PDF files legally. Whether its classic literature, research papers, or magazines, there is something for everyone. The platforms mentioned in this article, such as Project Gutenberg, Open Library, Academia.edu, and Issuu, provide access to a vast collection of PDF files. However, users should always be cautious and verify the legality of the source before downloading Http Servicemanual Info Trace Elliot Ah 350 Sm Owners Manual Html any PDF files. With these platforms, the world of PDF downloads is just a click away.

FAQs About Http Servicemanual Info Trace Elliot Ah 350 Sm Owners Manual Html Books

1. Where can I buy Http Servicemanual Info Trace Elliot Ah 350 Sm Owners Manual Html books? Bookstores: Physical bookstores like Barnes & Noble, Waterstones, and independent local stores. Online Retailers: Amazon, Book Depository, and various online bookstores offer a wide range of books in physical and digital formats.
2. What are the different book formats available? Hardcover: Sturdy and durable, usually more expensive. Paperback: Cheaper, lighter, and more portable than hardcovers. E-books: Digital books available for e-readers like Kindle or software like Apple Books, Kindle, and Google Play Books.
3. How do I choose a Http Servicemanual Info Trace Elliot Ah 350 Sm Owners Manual Html book to read? Genres: Consider the genre you enjoy (fiction, non-fiction, mystery, sci-fi, etc.). Recommendations: Ask friends, join book clubs, or explore online reviews and recommendations. Author: If you like a particular author, you might enjoy more of their work.
4. How do I take care of Http Servicemanual Info Trace Elliot Ah 350 Sm Owners Manual Html books? Storage: Keep them away from direct sunlight and in a dry environment. Handling: Avoid folding pages, use bookmarks, and handle them with clean hands. Cleaning: Gently dust the covers and pages occasionally.
5. Can I borrow books without buying them? Public Libraries: Local libraries offer a wide range of books for borrowing.

Book Swaps: Community book exchanges or online platforms where people exchange books.

6. How can I track my reading progress or manage my book collection? Book Tracking Apps: Goodreads, LibraryThing, and Book Catalogue are popular apps for tracking your reading progress and managing book collections. Spreadsheets: You can create your own spreadsheet to track books read, ratings, and other details.
7. What are Http Servicemanual Info Trace Elliot Ah 350 Sm Owners Manual Html audiobooks, and where can I find them? Audiobooks: Audio recordings of books, perfect for listening while commuting or multitasking. Platforms: Audible, LibriVox, and Google Play Books offer a wide selection of audiobooks.
8. How do I support authors or the book industry? Buy Books: Purchase books from authors or independent bookstores. Reviews: Leave reviews on platforms like Goodreads or Amazon. Promotion: Share your favorite books on social media or recommend them to friends.
9. Are there book clubs or reading communities I can join? Local Clubs: Check for local book clubs in libraries or community centers. Online Communities: Platforms like Goodreads have virtual book clubs and discussion groups.
10. Can I read Http Servicemanual Info Trace Elliot Ah 350 Sm Owners Manual Html books for free? Public Domain Books: Many classic books are available for free as theyre in the public domain. Free E-books: Some websites offer free e-books legally, like Project Gutenberg or Open Library.

Find Http Servicemanual Info Trace Elliot Ah 350 Sm Owners Manual Html :

glencoe world history test answers
girls guide to manage au trois
glencoe science physics principles and problems teachers edition
girofleacutee vie et mort dune sorciegravere
glencoe mcgraw algebrachapter8 quiz answer key
glen grey hospital vacancies
glencoe study guide answers
give me liberty vol 2
gliderol gts manual
gl1500 service manual
glencoe american literature book grade 11 mathematics
girling for fiat 131 abarth

gizmo uniform circular motion answer key
gitzo g112user guide
giver study guide and answers

Http Servicemanual Info Trace Elliot Ah 350 Sm Owners Manual Html :

pdf everyday fashions of the twenties by stella blum perlego - Aug 02 2022
web everyday fashions of the twenties edition unavailable s blum ed dover publications retrieved from perlego com book 110867 everyday fashions of the twenties as pictured in sears and other catalogs pdf original work published 2012
everyday fashions of the twenties as pictured in sears - Oct 16 2023
web 4 22 106 ratings8 reviews the roaring twenties age of jazz and flappers model t fords and hollywood movie stars was also a time when for millions the bulky catalogs of montgomery ward or sears roebuck were a substitute for the window displays of paris or new york fashion shops
everyday fashions of the twenties as pictured in sears and - Jul 13 2023
web bibliographic information the roaring twenties age of jazz and flappers model t fords and hollywood movie stars was also a time when for millions the bulky catalogs of montgomery ward or
everyday fashions of the twenties as pictured in sears and other - Aug 14 2023
web everyday fashions of the twenties as pictured in sears and other catalogs publication date 1981 topics clothing and dress united states history 20th century publisher new york dover publications collection inlibrary printdisabled internetarchivebooks
here s what high schoolers wore each decade throughout the ranker - Feb 25 2022
web sep 23 2021 the 60s was the decade of the mod especially for teens though first lady jackie o kennedy was a wildly influential figure in fashion who brought shift dresses and pillbox hats to the american home her conservative professional style wasn t as popular with the average high school student while mothers and young professionals
everyday fashions of the twenties as pictured in sears and - Sep 03 2022
web everyday fashions of the twenties as pictured in sears and other catalogs dover fashion and costumes ebook blum stella stella blum amazon in kindle store
everyday fashions of the twenties as pictured in sears and - Jan 07 2023
web jun 6 2012 for historians of costume nostalgia buffs and casual browsers these pages afford a rare picture
everyday fashions of the twenties as pictured in sears and - Mar 09 2023
web jul 4 2012 everyday fashions of the twenties as pictured in sears and other catalogs dover fashion and costumes kindle

edition by stella blum author editor format kindle edition 4 7 4 7 out of 5 stars 142 ratings

everyday fashions of the twenties as pictured in sears and - Dec 06 2022

web dec 1 1981 everyday fashions of the twenties as pictured in sears and other catalogs blum stella 9780486241340 books amazon ca

everyday fashions of the twenties as pictured in sears and - Nov 05 2022

web synopsis about this edition the roaring twenties age of jazz and flappers model t fords and hollywood movie stars was also a time when for millions the bulky catalogs of montgomery ward or sears roebuck were a substitute for the window displays of paris or new york fashion shops

1920s teenage girls fashion and clothing trends vintage dancer - Apr 29 2022

web 1920s galoshes full boots or half boots sports clothing in school was a long white middy blouse with rolled up sleeves black sailor scarf black bloomers black stockings and rubber sole tennis shoes 1928 bloomers and middy top bloomers worn for fashion were made of sateen in blue red green or purple

everyday fashions of the twenties as pictured in s book - Jun 12 2023

web everyday fashions of the twenties as pictured in s 500 small houses of the twenties jan 29 2023 spurred by a rapidly expanding economy and abundant resources of land building materials and skilled labor the dream of building and owning one s own home became a reality in america in the 1920s with the beginning market for small

everyday fashions of the twenties as pictured in sears and - Oct 04 2022

web jul 4 2012 everyday fashions of the twenties as pictured in sears and other catalogs dover fashion and costumes ebook blum stella stella blum amazon co uk books

everyday fashions of the twenties as pictured in sears and - May 11 2023

web about this ebook arrow forward the roaring twenties age of jazz and flappers model t fords and hollywood movie stars was also a time when for millions the bulky catalogs of montgomery ward

twentieth century fashion encyclopedia com - Mar 29 2022

web the fashion picture at home and abroad was defined by two basic points the narrow line with its strong body consciousness and the attention drawn to the hip line by a gathered waistband and the broad swinging youthful petticoat

everyday fashions of the twenties as pictured in sears and - Sep 15 2023

web dec 1 1981 this book is a fantastic resource on 1920s fashion starting with everyday as indicated in the title but edging on into the dressy showing us every evening worthy dresses shoes and so forth there is a nice introduction including brief year by year overviews of how things changed and lots of charming examples

everyday fashions of the twenties as pictured in sears and - Jul 01 2022

web buy everyday fashions of the twenties as pictured in sears and other catalogs by stella blum editor online at alibris we have new and used copies available in 1 editions starting at 5 52 shop now

everyday fashions of the twenties ebook by rakuten kobo - Feb 08 2023

web read everyday fashions of the twenties as pictured in sears and other catalogs by available from rakuten kobo the roaring twenties age of jazz and flappers model t fords and hollywood movie stars was also a time when for millio

15 iconic looks to dress exactly like in the 1920s fashion - May 31 2022

web nov 1 2023 the 1920s fashion decade known as the roaring twenties was one of the most extravagant stylistic moments ever inspired by the edwardian period fashion designers granted the 1920s fashion looks for special

everyday fashions of the twenties as pictured in sears and - Apr 10 2023

web paperback 1 december 1981 the roaring twenties age of jazz and flappers model t fords and hollywood movie stars was also a time when for millions the bulky catalogs of montgomery ward or sears roebuck were a substitute for the window displays of paris or new york fashion shops

lexikon der medizinirrtumer halbwahrheiten vorurt - May 11 2023

web lexikon der medizinirrtumer halbwahrheiten vorurt the lies of george w bush the creativity of action sterne und weltraum the psychology of meaning in life gesta romanorum the power of the charlatan deutsche nationalbibliographie und bibliographie der im ausland erschienenen deutschsprachigen veröffentlichungen prevention of

lexikon der medizinirrtümer halbwahrheiten vorurteile - Aug 14 2023

web zuletzt veröffentlichte er lexikon der medizin irrtümer das neue lexikon der medizin irrtümer alles über das eine sprechstunde und das Ärztehasserbuch weiteres zum autor werner bartens de

lexikon der medizinirrtumer halbwahrheiten vorurt book - Jul 01 2022

web lexikon der medizinirrtumer halbwahrheiten vorurt eventually you will very discover a other experience and talent by spending more cash nevertheless when get you bow to that you require to get those all needs afterward having significantly cash why dont you try to acquire something basic in the beginning

gesundheit die fünf größten irrtümer aus der medizin welt - Dec 06 2022

web dec 25 2007 die fünf größten irrtümer aus der medizin versuch einer zuordnung von fähigkeiten und psychischen eigenschaften zu einzelnen zonen des gehirns aus dem jahre 1864 schon damals vermutete man

lexikon der medizin irrtümer vorurteile halbwahrheiten - Jul 13 2023

web 346 pages hardcover first published march 1 2004 book details editions

lexikon der medizinirrtümer halbwahrheiten vorurteile - Sep 15 2023

web lexikon der medizinirrtümer halbwahrheiten vorurteile fragwürdige behandlungen

lexikon der medizinirrtumer halbwahrheiten vorurt download - Mar 09 2023
web lexikon der medizinirrtumer halbwahrheiten vorurt this is likewise one of the factors by obtaining the soft documents of this lexikon der medizinirrtumer halbwahrheiten vorurt by online you might not require more time to spend to go to the books inauguration as capably as search for them
lexikon der medizinirrtumer halbwahrheiten vorurt - May 31 2022
web harmful virus inside their computer lexikon der medizinirrtumer halbwahrheiten vorurt is open in our digital library an online admission to it is set as public thus you can download it instantly our digital library saves in compound countries allowing you to acquire the most less latency era to download any of our books next this one
lexikon der medizinirrtumer halbwahrheiten vorurt full pdf - Nov 05 2022
web lexikon der medizinirrtumer halbwahrheiten vorurt this is likewise one of the factors by obtaining the soft documents of this lexikon der medizinirrtumer halbwahrheiten vorurt by online you might not require more mature to spend to go to the books initiation as competently as search for them in some cases you likewise attain not discover the
lexikon der medizinirrtümer halbwahrheiten vorurteile - Apr 29 2022
web jun 8 2023 ausgezeichnet und arbeitet als medizin und wissenschaftsredakteur bei der süddeutschen zeitung zuletzt veröffentlichte er lexikon der medizin irrtümer das neue lexikon der medizin irrtümer alles über das eine sprechstunde und das Ärztehasserbuch weiteres zum autor werner bartens de
lexikon der medizinirrtumer halbwahrheiten vorurt - Feb 08 2023
web lexikon der medizinirrtumer halbwahrheiten vorurt as recognized adventure as skillfully as experience practically lesson lexikon der medizinirrtumer halbwahrheiten vorurt pdf can be one of the options to accompany you subsequent to having further time it will not waste your
lexikon der medizinirrtumer halbwahrheiten vorurt copy - Feb 25 2022
web may 18 2023 lexikon der medizinirrtumer halbwahrheiten vorurt 1 1 downloaded from uniport edu ng on may 18 2023 by guest lexikon der medizinirrtumer halbwahrheiten vorurt as recognized adventure as competently as experience more or less lesson amusement as capably as concord can be gotten by just checking out a books lexikon
lexikon der medizinirrtumer halbwahrheiten vorurt download - Aug 02 2022
web lexikon der medizinirrtumer halbwahrheiten vorurt if you ally obsession such a referred lexikon der medizinirrtumer halbwahrheiten vorurt book that will have enough money you worth get the extremely best seller from us currently from several preferred authors
lexikon der medizinirrtümer halbwahrheiten vorurteile - Oct 16 2023
web lexikon der medizinirrtümer halbwahrheiten vorurteile fragwürdige behandlungen piper taschenbuch band 4476 bartens

werner amazon de bücher bücher

lexikon der medizinirrtümer halbwahrheiten vorurteile - Apr 10 2023

web wissenschaftsredakteur bei der süddeutschen zeitung zuletzt veröffentlichte er lexikon der medizin irrtümer das neue lexikon der medizin irrtümer alles über das eine sprechstunde und das Ärztehasserbuch weiteres zum autor werner bartens de orientation sutd edu sg 1 2

lexikon der medizinirrtumer halbwahrheiten vorurt - Jun 12 2023

web lexikon der medizinirrtumer halbwahrheiten vorurt 3 3 chemist carried out pioneering research in electrochemist ry and thermodynami cs and won the nobel prize for his synthesis of ammonia a process essential for synthetic fertilizer and for the explosives germany needed in world war i an ardent patriot haber also developed chemical

lexikon der medizinirrtumer halbwahrheiten vorurt uniport edu - Sep 03 2022

web mar 19 2023 medizinirrtumer halbwahrheiten vorurt that you are looking for it will extremely squander the time however below next you visit this web page it will be as a result entirely easy to get as well as download

lexikondermedizinirrtumerhalbwahrheitenvorurt copy - Mar 29 2022

web lexikon der medizinirrtumer halbwahrheiten vorurt pdf book 2 halbwahrheiten vorurt pdf download download books lexikon der medizinirrtumer halbwahrheiten vorurt 3 3 in der pflege bedeutet mit welchen techniken gearbeitet wird und welche produkte als ergebnis wissenschaftli

lexikon der medizinirrtumer halbwahrheiten vorurt - Jan 07 2023

web website lexikon der medizinirrtumer halbwahrheiten vorurt aug 04 2023 1 lexikon der medizinirrtumer halbwahrheiten vorurt as recognized adventure as skillfully as experience practically lesson amusement as capably as accord can be gotten by just checking out a books lexikon der lexikon der medizinirrtumer halbwahrheiten vorurt

lexikon der medizinirrtumer halbwahrheiten vorurt - Oct 04 2022

web recognizing the artifice ways to get this ebook lexikon der medizinirrtumer halbwahrheiten vorurt is additionally useful you have remained in right site to begin getting this info get the lexikon der medizinirrtumer halbwahrheiten vorurt join that we offer here and check out the link you could purchase lead lexikon der medizinirrtumer

deep learning for natural language processing springer - May 12 2023

web discover the concepts of deep learning used for natural language processing nlp in this practical book with full fledged examples of neural network models such as recurrent neural networks long short term memory networks and sequence 2 sequence models

natural language processing with improved deep learning hindawi - Mar 30 2022

web oct 10 2021 similarly lauriola et al has critically studied and analyzed the use of deep learning in natural language

processing nlp and the models techniques and tools used so far have been summarized fathi and shoja also discuss the application of deep neural networks for natural language processing

deep learning for natural language processing - Jul 02 2022

web natural language processing nlp develops methods for making human language accessible to computers the goal of this course is to provide students with a theoretical understanding of and practical experience with the advanced algorithms that power modern nlp the course focuses on methods based on deep neural networks

natural language processing with deep learning cs224n ling284 - Jan 28 2022

web what is nlg a review neural nlg model and training algorithm decoding from nlg models training nlg models evaluating nlg systems ethical considerations what is natural language generation natural language generation is one side of natural language processing nlp natural language understanding nlu natural

pdf deep learning for natural language processing - Aug 03 2022

web jan 1 2018 deep learning for natural language processing advantages and challenges authors hang li discover the world s research available via license cc by 4 0 content may be subject to

deep learning for natural language processing and language modelling - Aug 15 2023

web sep 21 2018 the article presents an example of practical application of deep learning methods for language processing and modelling development of statistical language models helps to predict a sequence of recognized words and phonemes and can be used for improving speech processing and speech recognition

deep learning in natural language processing springerlink - Feb 26 2022

web deep learning in natural language processing home book editors li deng yang liu provides an up to date and comprehensive survey of deep learning research and its applications in natural language processing covers all key tasks and techniques of natural language processing

deep learning for natural language processing springerlink - Feb 09 2023

web jul 6 2021 deep learning is an extension of machine learning and artificial intelligence that teaches computers to learn from experiences the same as humans do many deep learning models are successfully deployed for various natural language processing tasks for the last few years

introduction to natural language processing and deep learning - Jun 01 2022

web jun 27 2018 natural language processing npl is an extremely difficult task in computer science languages present a wide variety of problems that vary from language to language structuring or extracting meaningful information from free text represents a great solution if done in the right manner

deep learning for natural language processing o reilly media - Dec 07 2022

web gain insights into the basic building blocks of natural language processing learn how to select the best deep neural network to solve your nlp problems explore convolutional and recurrent neural networks and long short term memory networks

deep learning for natural language processing dl4nlp - Jul 14 2023

web this website offers an open and free introductory course on deep learning algorithms and popular architectures for contemporary natural language processing nlp the course is constructed holistically and as self contained as possible in order to cover all of the basics required for understanding current research

deep learning for natural language processing sciencedirect - Apr 11 2023

web jan 1 2018 abstract in this chapter we survey various deep learning techniques that are applied in the field of natural language processing we also propose methods for computing sentence embedding and document embedding both sentence embedding and document embedding are able to capture the distribution of hidden concepts in the

deep learning for natural language processing advantages and - Oct 05 2022

web sep 8 2017 introduction deep learning refers to machine learning technologies for learning and utilizing deep artificial neural networks such as deep neural networks dnn convolutional neural networks cnn and recurrent neural networks rnn

deep learning for natural language processing sciencedirect - Jun 13 2023

web jan 1 2018 introduction spoken and written text carries most of human information and knowledge given that natural language is the primary means of human communication a widely accepted rule of thumb says that 80 of all business information was unstructured primarily in text shilakes 1998

deep learning for natural language processing a survey - Sep 16 2023

web jun 26 2023 over the last decade deep learning has revolutionized machine learning neural network architectures have become the method of choice for many different applications in this paper we survey the applications of deep learning to natural language processing nlp problems

deep learning for natural language processing machine learning - Jan 08 2023

web the 5 promises of deep learning for natural language processing are as follows the promise of drop in replacement models that is deep learning methods can be dropped into existing natural language systems as replacement models that can achieve commensurate or better performance the promise of new nlp models

deep learning for natural language parsing ieee xplore - Nov 06 2022

web sep 9 2019 abstract natural language processing problems such as speech recognition text based data mining and text or speech generation are becoming increasingly important before effectively approaching many of these problems it is necessary to process the syntactic structures of the sentences

deep learning for natural language processing in - Apr 30 2022
web may 1 2020 natural language processing nlp aims to convert free text into structured data 1 in radiology nlp has various applications flagging and categorization of imaging findings patient prioritization imaging protocol generation and research 2 3 in recent years there have been significant developments in deep learning dl technology
deep learning for natural language processing 2nd edition - Sep 04 2022
web deep learning for natural language processing livelessons second edition is an introduction to building natural language models with deep learning these lessons bring intuitive explanations of essential theory to life with
an introduction to deep learning in natural language processing models - Mar 10 2023
web jan 22 2022 nlp in a nutshell natural language processing nlp is a branch of artificial intelligence brimful of intricate sophisticated and challenging tasks related to the language such as machine translation question answering summarization and so on