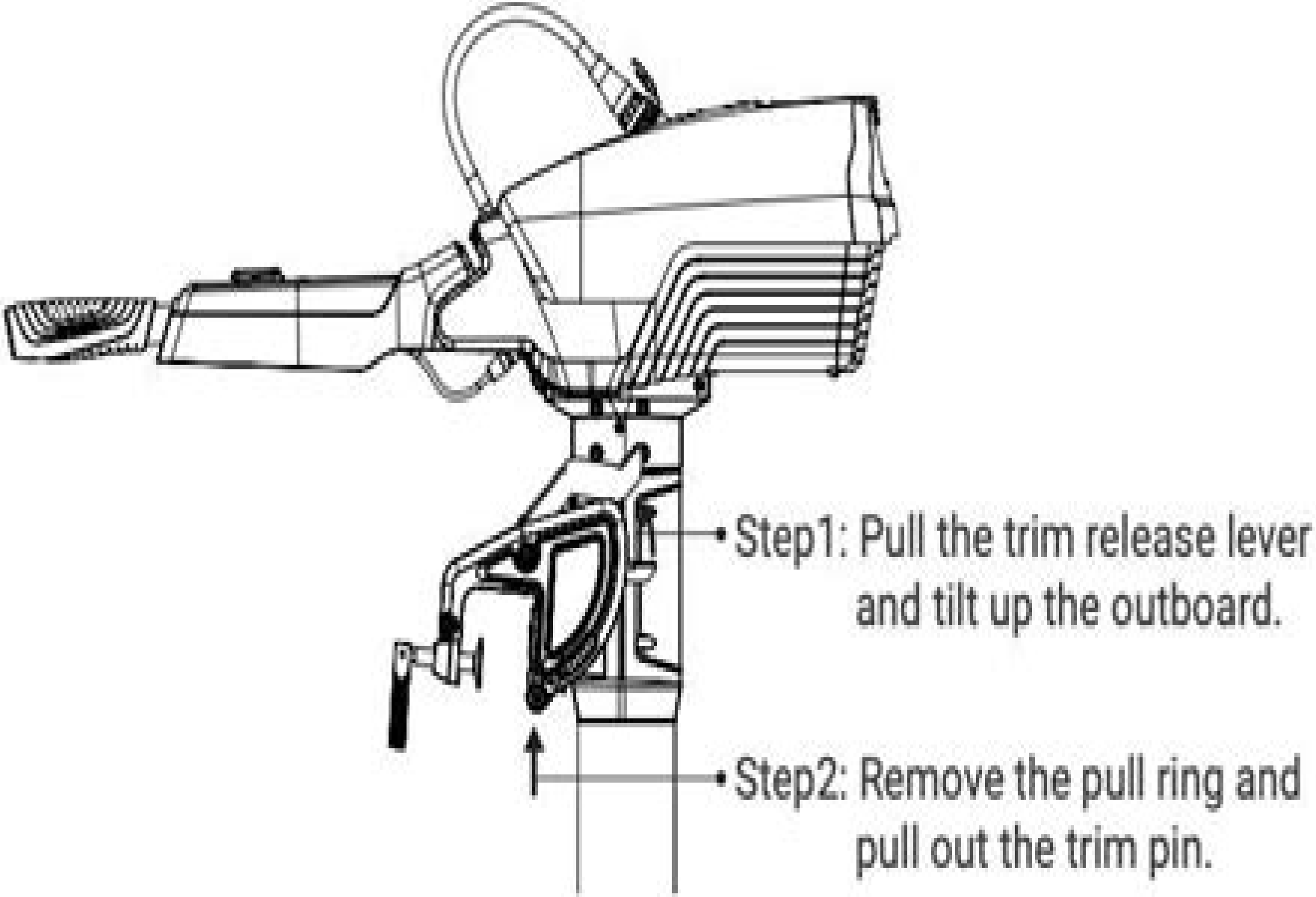
Step1: Pull the trim release lever and tilt up the outboard.
Step2: Remove the pull ring and pull out the trim pin.

How To Install Tilt Trim Motor

JA Banks

How To Install Tilt Trim Motor:

How To Install Tilt Trim Motor Book Review: Unveiling the Magic of Language

In a digital era where connections and knowledge reign supreme, the enchanting power of language has be much more apparent than ever. Its ability to stir emotions, provoke thought, and instigate transformation is truly remarkable. This extraordinary book, aptly titled "**How To Install Tilt Trim Motor**," compiled by a very acclaimed author, immerses readers in a captivating exploration of the significance of language and its profound impact on our existence. Throughout this critique, we shall delve into the book is central themes, evaluate its unique writing style, and assess its overall influence on its readership.

https://staging.conocer.cide.edu/files/virtual-library/Documents/manual_de_instruo_do_samsung_galaxy_s3.pdf

Table of Contents How To Install Tilt Trim Motor

1. Understanding the eBook How To Install Tilt Trim Motor
    - The Rise of Digital Reading How To Install Tilt Trim Motor
    - Advantages of eBooks Over Traditional Books
2. Identifying How To Install Tilt Trim Motor
    - Exploring Different Genres
    - Considering Fiction vs. Non-Fiction
    - Determining Your Reading Goals
3. Choosing the Right eBook Platform
    - Popular eBook Platforms
    - Features to Look for in an How To Install Tilt Trim Motor
    - User-Friendly Interface
4. Exploring eBook Recommendations from How To Install Tilt Trim Motor
    - Personalized Recommendations
    - How To Install Tilt Trim Motor User Reviews and Ratings
    - How To Install Tilt Trim Motor and Bestseller Lists

5. Accessing How To Install Tilt Trim Motor Free and Paid eBooks
    - How To Install Tilt Trim Motor Public Domain eBooks
    - How To Install Tilt Trim Motor eBook Subscription Services
    - How To Install Tilt Trim Motor Budget-Friendly Options
6. Navigating How To Install Tilt Trim Motor eBook Formats
    - ePub, PDF, MOBI, and More
    - How To Install Tilt Trim Motor Compatibility with Devices
    - How To Install Tilt Trim Motor Enhanced eBook Features
7. Enhancing Your Reading Experience
    - Adjustable Fonts and Text Sizes of How To Install Tilt Trim Motor
    - Highlighting and Note-Taking How To Install Tilt Trim Motor
    - Interactive Elements How To Install Tilt Trim Motor
8. Staying Engaged with How To Install Tilt Trim Motor
    - Joining Online Reading Communities
    - Participating in Virtual Book Clubs
    - Following Authors and Publishers How To Install Tilt Trim Motor
9. Balancing eBooks and Physical Books How To Install Tilt Trim Motor
    - Benefits of a Digital Library
    - Creating a Diverse Reading Collection How To Install Tilt Trim Motor
10. Overcoming Reading Challenges
    - Dealing with Digital Eye Strain
    - Minimizing Distractions
    - Managing Screen Time
11. Cultivating a Reading Routine How To Install Tilt Trim Motor
    - Setting Reading Goals How To Install Tilt Trim Motor
    - Carving Out Dedicated Reading Time
12. Sourcing Reliable Information of How To Install Tilt Trim Motor
    - Fact-Checking eBook Content of How To Install Tilt Trim Motor
    - Distinguishing Credible Sources
13. Promoting Lifelong Learning

    - Utilizing eBooks for Skill Development
    - Exploring Educational eBooks
14. Embracing eBook Trends
    - Integration of Multimedia Elements
    - Interactive and Gamified eBooks

How To Install Tilt Trim Motor Introduction

In this digital age, the convenience of accessing information at our fingertips has become a necessity. Whether its research papers, eBooks, or user manuals, PDF files have become the preferred format for sharing and reading documents. However, the cost associated with purchasing PDF files can sometimes be a barrier for many individuals and organizations. Thankfully, there are numerous websites and platforms that allow users to download free PDF files legally. In this article, we will explore some of the best platforms to download free PDFs. One of the most popular platforms to download free PDF files is Project Gutenberg. This online library offers over 60,000 free eBooks that are in the public domain. From classic literature to historical documents, Project Gutenberg provides a wide range of PDF files that can be downloaded and enjoyed on various devices. The website is user-friendly and allows users to search for specific titles or browse through different categories. Another reliable platform for downloading How To Install Tilt Trim Motor free PDF files is Open Library. With its vast collection of over 1 million eBooks, Open Library has something for every reader. The website offers a seamless experience by providing options to borrow or download PDF files. Users simply need to create a free account to access this treasure trove of knowledge. Open Library also allows users to contribute by uploading and sharing their own PDF files, making it a collaborative platform for book enthusiasts. For those interested in academic resources, there are websites dedicated to providing free PDFs of research papers and scientific articles. One such website is Academia.edu, which allows researchers and scholars to share their work with a global audience. Users can download PDF files of research papers, theses, and dissertations covering a wide range of subjects. Academia.edu also provides a platform for discussions and networking within the academic community. When it comes to downloading How To Install Tilt Trim Motor free PDF files of magazines, brochures, and catalogs, Issuu is a popular choice. This digital publishing platform hosts a vast collection of publications from around the world. Users can search for specific titles or explore various categories and genres. Issuu offers a seamless reading experience with its user-friendly interface and allows users to download PDF files for offline reading. Apart from dedicated platforms, search engines also play a crucial role in finding free PDF files. Google, for instance, has an advanced search feature that allows users to filter results by file type. By specifying the file type as "PDF," users can find websites that offer free PDF downloads on a specific topic. While downloading How To Install Tilt Trim Motor free PDF files is convenient,

its important to note that copyright laws must be respected. Always ensure that the PDF files you download are legally available for free. Many authors and publishers voluntarily provide free PDF versions of their work, but its essential to be cautious and verify the authenticity of the source before downloading How To Install Tilt Trim Motor. In conclusion, the internet offers numerous platforms and websites that allow users to download free PDF files legally. Whether its classic literature, research papers, or magazines, there is something for everyone. The platforms mentioned in this article, such as Project Gutenberg, Open Library, Academia.edu, and Issuu, provide access to a vast collection of PDF files. However, users should always be cautious and verify the legality of the source before downloading How To Install Tilt Trim Motor any PDF files. With these platforms, the world of PDF downloads is just a click away.

FAQs About How To Install Tilt Trim Motor Books

How do I know which eBook platform is the best for me? Finding the best eBook platform depends on your reading preferences and device compatibility. Research different platforms, read user reviews, and explore their features before making a choice. Are free eBooks of good quality? Yes, many reputable platforms offer high-quality free eBooks, including classics and public domain works. However, make sure to verify the source to ensure the eBook credibility. Can I read eBooks without an eReader? Absolutely! Most eBook platforms offer webbased readers or mobile apps that allow you to read eBooks on your computer, tablet, or smartphone. How do I avoid digital eye strain while reading eBooks? To prevent digital eye strain, take regular breaks, adjust the font size and background color, and ensure proper lighting while reading eBooks. What the advantage of interactive eBooks? Interactive eBooks incorporate multimedia elements, quizzes, and activities, enhancing the reader engagement and providing a more immersive learning experience. How To Install Tilt Trim Motor is one of the best book in our library for free trial. We provide copy of How To Install Tilt Trim Motor in digital format, so the resources that you find are reliable. There are also many Ebooks of related with How To Install Tilt Trim Motor. Where to download How To Install Tilt Trim Motor online for free? Are you looking for How To Install Tilt Trim Motor PDF? This is definitely going to save you time and cash in something you should think about. If you trying to find then search around for online. Without a doubt there are numerous these available and many of them have the freedom. However without doubt you receive whatever you purchase. An alternate way to get ideas is always to check another How To Install Tilt Trim Motor. This method for see exactly what may be included and adopt these ideas to your book. This site will almost certainly help you save time and effort, money and stress. If you are looking for free books then you really should consider finding to assist you try this. Several of How To Install Tilt Trim Motor are for sale to free while some are payable. If you arent sure if the books you would like to download works with for usage along with your computer, it is possible to download free trials. The free guides

make it easy for someone to free access online library for download books to your device. You can get free download on free trial for lots of books categories. Our library is the biggest of these that have literally hundreds of thousands of different products categories represented. You will also see that there are specific sites catered to different product types or categories, brands or niches related with How To Install Tilt Trim Motor. So depending on what exactly you are searching, you will be able to choose e books to suit your own need. Need to access completely for Campbell Biology Seventh Edition book? Access Ebook without any digging. And by having access to our ebook online or by storing it on your computer, you have convenient answers with How To Install Tilt Trim Motor To get started finding How To Install Tilt Trim Motor, you are right to find our website which has a comprehensive collection of books online. Our library is the biggest of these that have literally hundreds of thousands of different products represented. You will also see that there are specific sites catered to different categories or niches related with How To Install Tilt Trim Motor So depending on what exactly you are searching, you will be able tochoose ebook to suit your own need. Thank you for reading How To Install Tilt Trim Motor. Maybe you have knowledge that, people have search numerous times for their favorite readings like this How To Install Tilt Trim Motor, but end up in harmful downloads. Rather than reading a good book with a cup of coffee in the afternoon, instead they juggled with some harmful bugs inside their laptop. How To Install Tilt Trim Motor is available in our book collection an online access to it is set as public so you can download it instantly. Our digital library spans in multiple locations, allowing you to get the most less latency time to download any of our books like this one. Merely said, How To Install Tilt Trim Motor is universally compatible with any devices to read.

Find How To Install Tilt Trim Motor :

~~manual de instruo do samsung galaxy s3~~
manual de mp4 philips gogear
manual de funciones de una empresa constructora
manual de laptop emachines
manual de laptop compaq presario cq40
manual de mitsubishi l300
manual de taller yamaha t max
manual de instrucciones alfa romeo 156
manual de evaluacion de riesgos
~~manual de hht25 s honda~~
manual de arduino wifly shield

manual da tucson 2015
manual de nero 11 en espanol
~~manual de instalacion minisplit mirage~~
manual de taller suzuki marauder 250

How To Install Tilt Trim Motor :

go microsoft office 2013 completed assignments access pdf - Jun 01 2022
web aug 17 2023 go microsoft office 2013 completed assignments access 1 11 downloaded from uniport edu ng on august 17 2023 by guest go microsoft office 2013
go microsoft office 2013 completed assignments access - Jan 28 2022
web jun 26 2023 completed assignments pdf go microsoft office go microsoft 2013 assignments completed when the microsoft office project 2007 add in for outlook
september 12 2023 kb5030219 os build 22621 2283 - Nov 25 2021
web sep 12 2023 microsoft update catalog yes to get the standalone package for this update go to the microsoft update catalog website windows server update services
go microsoft office 2013 completed assignments - Jul 14 2023
web go microsoft office 2013 completed assignments 2020 11 13 bradley richard go microsoft office 2013 completed go office 2013 integrated project 1a 1 of 4 go
go microsoft office 2013 completed assignments - Aug 03 2022
web go microsoft office 2013 completed assignments 3 3 proper as with ease as easy quirk to get those all we provide go microsoft office 2013 completed assignments and
office 2013 toplu güncelleştirmesi nisan 2013 microsoft desteği - Nov 06 2022
web düzeltme paketinin adı bilgi bankası makale numarası Ürün wacserver x none msp 2799821 wacserver x none msp office web apps server 2013 düzeltme paketinin
go microsoft office 2013 completed assignments loginwave - Feb 09 2023
web aug 21 2022 if you are looking for go microsoft office 2013 completed assignments check the results below 1 go microsoft office 2013 completed assignments pdf
go microsoft office 2013 completed assignments pdf pdf ftp - Apr 30 2022
web you dependence currently this go microsoft office 2013 completed assignments pdf as one of the most dynamic sellers here will utterly be along with the best options to

go microsoft office 2013 completed assignments pdf - Oct 25 2021
web jul 20 2023 go microsoft office 2013 completed assignments 1 12 downloaded from uniport edu ng on july 20 2023 by guest go microsoft office 2013 completed
go microsoft office 2013 completed assignments pdf - Aug 23 2021
web may 18 2023 go microsoft office 2013 completed assignments 1 14 downloaded from uniport edu ng on may 18 2023 by guest go microsoft office 2013 completed
go microsoft office 2013 completed assignments copy - Mar 30 2022
web aug 1 2023 go microsoft office 2013 completed assignments 1 12 downloaded from uniport edu ng on august 1 2023 by guest go microsoft office 2013 completed
go microsoft office 2013 completed assignments access - Jul 02 2022
web jul 7 2023 be gotten by just checking out a book go microsoft office 2013 completed assignments access after that it is not directly done you could receive even more re
office 2013 2013 ağustos için toplu güncelleştirme microsoft - Jan 08 2023
web gİrİŞ 2013 ağustos için toplu güncelleştirme paketleri office 2013 sunucuları ve microsoft office 2013 için son düzeltmeleri içerir bir üretim ortamında dağıtmadan önce
aralık 2013 toplu güncelleştirmesi office 2013 microsoft desteği - Dec 07 2022
web aralık 2013 için toplu güncelleştirme paketleri office 2013 sunucuları ve microsoft office 2013 için son düzeltmeleri içerir bir üretim ortamında dağıtmadan önce düzeltmeleri
microsoft office 2013 book completed assignments top writers - Dec 27 2021
web microsoft office 2013 book completed assignments research papers obsity in children review 10289 customer reviews essay research paper coursework
go microsoft office 2013 completed assignments pdf pdf pdf - Feb 26 2022
web go microsoft office 2013 completed assignments pdf pdf unveiling the magic of words a report on go microsoft office 2013 completed assignments pdf pdf in a
go microsoft office 2013 completed assignments secure4 khronos - Oct 05 2022
web jun 22 2023 go microsoft office 2013 completed assignments is at hand in our book accumulation an online access to it is set as public so you can get it instantly this go
go microsoft office 2013 completed assignments access pdf - Sep 04 2022
web apr 27 2023 its nearly what you infatuation currently this go microsoft office 2013 completed assignments access as one of the most practicing sellers here will utterly

go microsoft office 2013 completed assignments pdf uniport edu - Jun 13 2023
web aug 10 2023 go microsoft office 2013 completed assignments 1 14 downloaded from uniport edu ng on august 10 2023 by guest go microsoft office 2013 completed
go microsoft office 2013 completed assignments - May 12 2023
web merely said the go microsoft office 2013 completed assignments is universally compatible with any devices to read go microsoft office 2013 completed
2 haziran 2020 office 2013 için güncelleştirme kb4484356 - Mar 10 2023
web may 20 2020 ekranın sağ kenarından çekerek ara yı seçin fare kullanıyorsanız ekranın sağ alt köşesinin üzerine gelin ve ara yı seçin windows update i girin windows
go microsoft office 2013 completed assignments access - Apr 11 2023
web you could purchase guide go microsoft office 2013 completed assignments access or acquire it as soon as feasible you could speedily download this go microsoft office
go microsoft office 2013 completed assignments - Aug 15 2023
web go 2013 completed assignments free pdf ebook download go 2013 completed assignments download or read online ebook go microsoft office 2013 completed assignments in pdf format from the best user guide
go microsoft office 2013 completed assignments uniport edu - Sep 23 2021
web jul 20 2023 go microsoft office 2013 completed assignments 2 11 downloaded from uniport edu ng on july 20 2023 by guest encourages students to expand their
pons reise sprachfuhrer schwedisch im richtigen m pdf - May 13 2023
web jun 17 2023 pons reise sprachfuhrer schwedisch im richtigen m 1 6 downloaded from uniport edu ng on june 17 2023 by guest pons reise sprachfuhrer schwedisch im richtigen m right here we have countless ebook pons reise sprachfuhrer schwedisch im richtigen m and collections to check out we additionally pay for variant types and
pons reise sprachführer schwedisch im richtigen moment das richtige - Oct 06 2022
web june 4th 2020 pons bildworterbuch schwedisch 1 500 nutzliche pons reisesprachfuhrerthai im richtigen moment das richtige wort pons reisesprachfuhrr danisch im richtigen moment pons sprachfuhrer in bilder portugiesisch jeder kan portugiesisch sprchen lle worter und satze fur alltag und reise pons sprachfuhrer in
pons reise sprachfuhrer schwedisch im richtigen m pdf 2023 - Jun 14 2023
web pons reise sprachfuhrer schwedisch im richtigen m pdf pages 3 5 pons reise sprachfuhrer schwedisch im richtigen m pdf upload arnold h williamson 3 5 downloaded from support ortax org on september 3 2023 by arnold h williamson reise sprachführer norwegisch 2016 sprachführer mit nützlichen redewendungen und

pons reise sprachfuhrer schwedisch im richtigen m pdf - Jan 29 2022
web pons reise sprachfuhrer schwedisch im richtigen m downloaded from grad learntotrade co uk by guest molly barker fünf meter zeit cambridge english ihr schwedisch sprachbegleiter auf der und wendungen für alle typischen reisesituationen markierung der wichtigsten sätze mit reisewörterbuch deutsch schwedisch und
pons sprachführer schwedisch alles für die reise taschenbuch amazon de - Dec 08 2022
web alles für die reise der kleine sprachführer für die hosentasche mit einfachen sätzen um sich schnell zu verständigen reisewörterbuch schwedisch deutsch und deutsch schwedisch mit über 5 000 begriffen wörter und sätze zu den themen die für ihre reise wichtig sind
pons reise sprachfuhrer schwedisch im richtigen m pdf copy - Nov 07 2022
web title pons reise sprachfuhrer schwedisch im richtigen m pdf copy black ortax org created date 9 4 2023 7 11 08 pm
pons reise sprachfuhrer schwedisch im richtigen m pdf - Sep 05 2022
web 2 pons reise sprachfuhrer schwedisch im richtigen m 2019 07 23 aktueller und umfassender wortschatz mit vielen beispielsätzen mit infofenstern zu sprache und kultur viele extras wie z b kurzgrammatik verbtabellen musterbriefe englische silbentrennung und zeichensetzung international mit länderspezifischem wortschatz aus den
pons reise sprachfuhrer schwedisch im richtigen m copy - May 01 2022
web dec 4 2022 this pons reise sprachfuhrer schwedisch im richtigen m but end up in malicious downloads rather than reading a good book with a cup of coffee in the afternoon instead they cope with some infectious virus inside their computer pons reise sprachfuhrer schwedisch im richtigen m is available in our digital library an online
pons pocket sprachführer schwedisch sprachen lernen schwedisch - Feb 10 2023
web in den warenkorb alles für die reise mit den wichtigsten 5 000 wörtern und sätzen die sie für ihre reise brauchen die wichtigsten themen für den urlaub mit reisewörterbuch schwedisch deutsch und deutsch schwedisch passt in jede strand und hosentasche medium buch themenwelten reise schwierigkeitsgrad für anfänger
pons reise sprachführer schwedisch im richtigen moment das richtige - Jul 15 2023
web pons reise sprachführer schwedisch im richtigen moment das richtige wort mit vertonten beispielsätzen zum anhören im richigen moment das richtige wort isbn 9783125181557 kostenloser versand für alle bücher
pdf pons reise sprachfuhrer schwedisch im richtigen m - Mar 11 2023
web sprachfuhrer deutsch schwedisch und kompaktworterbuch mit 1500 wortern die sammlung alles wird gut von t p books ist fur menschen die fur tourismus und geschaftsreisen ins ausland reisen
pons reise sprachfuhrer schwedisch im richtigen m - Mar 31 2022
web apr 25 2023 pons reise sprachfuhrer schwedisch im richtigen m 2 5 downloaded from uniport edu ng on april 25 2023

by guest unbelievable coincidences teetering on the edge of the abyss risking everything and reaching multi national stardom not to mention life choices that could have sent the whole story in an entirely different direction

pons reise sprachführer schwedisch - Aug 16 2023

web im richtigen moment das richtige wort niemals sprachlos finden sie im sprachführer den passenden satz für jede situation verstehen und verstanden werden mit dem wörterbuch schwedisch deutsch und deutsch schwedisch kommen sie überall sicher durch wie die einheimischen mit insider tipps verstehen sie land und leute besser

pons reise sprachfuhrer schwedisch im richtigen m download - Jan 09 2023

web 2 pons reise sprachfuhrer schwedisch im richtigen m 2020 12 17 geschäftsreisende in der englischsprachigen welt mit schwerpunkt grossbritannien und usa zuletzt s ba 5 10 die 16 thematisch angelegten kapitel liefern vokabular und wendungen zu allgemeinen situationen aber auch für im geschäftsleben wichtige bereiche

pons reise sprachfuhrer schwedisch im richtigen m pdf - Jul 03 2022

web pons reise sprachfuhrer schwedisch im richtigen m 1 pons reise sprachfuhrer schwedisch im richtigen m yeah reviewing a book pons reise sprachfuhrer schwedisch im richtigen m could accumulate your close friends listings this is just one of the solutions for you to be successful as understood expertise does not suggest that

pons reise sprachfuhrer schwedisch im richtigen m pdf - Aug 04 2022

web may 24 2023 enjoy now is pons reise sprachfuhrer schwedisch im richtigen m below privatization joseph prokopenko 1998 □□□□□□□□□ makino seiichi 1989 grammatical terms characteristics of japanese grammar basic conjugations verbs connection forms of important expressions numerals and counters compound words

pons reise sprachführer schwedisch im richtigen moment das richtige - Jun 02 2022

web pons reise sprachführer schwedisch im richtigen moment das richtige wort mit vertonten beispielsätzen zum anhören by bespoke cityam com author reinhard schmeichel bespoke cityam com

pons reise sprachfuhrer schwedisch im richtigen m - Feb 27 2022

web pons reise sprachfuhrer schwedisch im richtigen m 2 6 downloaded from uniport edu ng on september 8 2023 by guest learning english green line new 2003 please sir rachel kramer bussel 2010 04 07 the fortunate women of please sir are not docile pushovers by any means

pons reise sprachführer schwedisch freytag berndt - Apr 12 2023

web im richtigen moment das richtige wortniemals sprachlos finden sie im sprachführer den passenden satz ab 24 gratis versand nach at de online bestellen pons reise sprachführer schwedisch freytag berndt

pons Übersetzer im app store - Dec 28 2021

web der kostenlose Übersetzer von pons schnell und zuverlässig übersetzen in über 50 wörterbüchern von pons und einer

textübersetzung für insgesamt 40 sprachen der Übersetzer bietet lösungen für jede suchanfrage die app umfasst die pons wörterbücher für arabisch bulgarisch chinesisch deutsch e

pdf antologia delle letterature romanze del medioevo - Aug 15 2023

web la lirica romanza del medioevo storia tradizioni interpretazioni atti del vi convegno triennale della società italiana di filologia romanza a cura di furio brugnolo e francesca gambino padova unipress questioni linguistiche e testuali a margine del rimario dei

medioevo romanzo jstor - Jan 08 2023

web antologia delle letterature romanze del medioevo è un libro di paolo gresti pubblicato da pàtron nella collana storia e testi acquista su ibs a 38 00

letterature romanze del medioevo riassunto 1 - Dec 27 2021

web i pilastri della terra uno dei romanzi storici medievali più belli scritti in epoca contemporanea è i pilastri della terra di ken follett l opera ambientata nell inghilterra

letterature romanze del medioevo letterature romanze del - Jul 02 2022

web appunto con riassunto sulla letteratura del medioevo e sull evoluzione delle lingue romanze amor cortese ciclo bretone il medioevo è un periodo storico che viene

vol 49 no 1 august 1995 of romance philology on jstor - Jan 28 2022

web letteratura romanza medievale dalla letteratura in francia a giacomo da lentini riassunto di italiano

letteratura medievale wikipedia - Jun 13 2023

per letteratura medievale si intende l insieme della produzione letteraria del medioevo in europa vale a dire del periodo storico compreso tra la caduta dell impero romano d occidente 476 e il 1492 anno della scoperta dell america e in italia della morte di lorenzo il magnifico questa letteratura è costituita tanto da opere religiose quanto da scritti laici e

profilo delle letterature romanze medievali amazon it - Aug 03 2022

web storia e caratteristiche della letteratura medievale le opere ed i generi letterari con la nascita dei volgari chanson de geste poesia trobadorica e romanzo cortese vincenzo

profilo delle letterature romanze medievali goodreads - Feb 09 2023

web 154 medioevo romanzo alla critica testuale si continua a tener ferma l inscindibilit tra ri cerca testuale e ricerca dialettologica o grammaticale tra storia della cultura romanza e

romanzi storici medievali 7 titoli da leggere assolutamente - Oct 25 2021

varvaro letterature romanze del medioevo studocu - Feb 26 2022

web jul 3 2015 letterature romanze del medioevo riassunto 1 paragrafo umberto fusco l area linguistica che chiamiamo francese include la sola metà

letterature romanze del medioevo alberto varvaro - Jul 14 2023

web nov 9 2020 letterature romanze del medioevo è un libro di alberto varvaro pubblicato da il mulino nella collana saggi acquista su ibs a 26 60

letteratura medievale e lingue romanze skuola net - Apr 30 2022

web letterature romanze del medioevo varvaro nota 1 le principali letterature romanze medievali sono 6 italiana francese provenzale catalana

letterature romanze del medioevo varvaro docsity - Oct 05 2022

web profilo delle letterature romanze medievali copertina flessibile 12 settembre 2019 di furio brugnolo autore roberta capelli autore 4 7 46 voti visualizza tutti i formati ed

antologia delle letterature romanze del medioevo libreria ibs - Dec 07 2022

web presentati insieme e in una prospettiva comparatistica gli sviluppi di tutte le letterature romanze medievali dalla penisola iberica all italia dalle origini ai tempi di boccaccio

letterature romanze del medioevo copertina flessibile amazon it - Mar 10 2023

web letterature romanze del medioevo copertina flessibile 14 gennaio 1985 letterature romanze del medioevo copertina flessibile 14 gennaio 1985 di alberto varvaro

letteratura medievale storia caratteristiche opere e generi - Jun 01 2022

web sep 25 2016 riassunto completo ed esaustivo per l esame di filologia romanza del testo di varvaro intitolato letterature romanze del medioevo comprendente i

profilo delle letterature romanze medievali eth z - Apr 11 2023

web profilo delle letterature romanze medievali e carocci editore indice premessa 11 1 la letteratura francese antica i 5 laletteratura francese del tardo medioevo 190 2

letterature romanze del medioevo varvaro docsity - Sep 04 2022

web letterature romanze del medioevo capitolo primo un introduzione alle letterature romanze medievali italiana francese provenzale catalana castigliana e portoghese

le origini delle letterature medievali romanze maria luisa - Nov 06 2022

web nov 19 2016 alberto varvaro letterature romanze del medioevo 1 unita e articolazione del mondo romanzo medievale letterature romanze medievali oltre l italiana

il mulino volumi alberto varvaro letterature romanze - May 12 2023

web jan 1 1985 letterature romanze del medioevo prefazione 1 preliminari 2 l esperienza religiosa 3 l esperienza lirica 4

la letteratura romanza medievale riassunto studenti it - Nov 25 2021

web may 11 2020 quando si parla di libri ambientati in un altra epoca i romanzi storici medievali la fanno probabilmente da padrone non è un caso dal momento che come

letterature romanze del medioevo varvaro docsity - Mar 30 2022

web leggende dei cristiani orientali nelle letterature romanze del medioevo download xml the lyric poetry of philippe de remy download xml in defense of a alonso s views

i migliori romanzi storici medievali - Sep 23 2021