How to connect a car amp to a smartphone or other audio source in your home

SoundCertified

If not connecting a car amp used in your home to a home stereo, you can use a wide range of audio sources. Here are several examples that make it simple while giving great sound quality.

Example 1

Smartphone/tablet with a headphone jack (3.5mm jack) or USB-headphone jack adapter

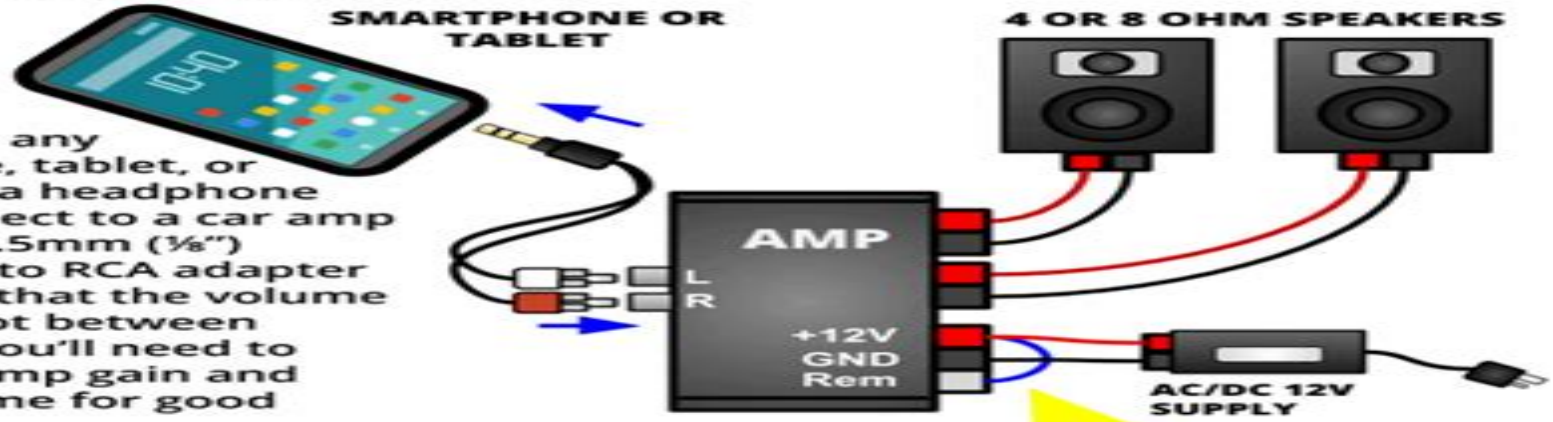

You can use any smartphone, tablet, or laptop with a headphone jack to connect to a car amp by using a 3.5mm (⅛") headphone to RCA adapter cable. Note that the volume can vary a lot between devices so you'll need to adjust the amp gain and device volume for good sound.

NOTE: *Some newer smartphones don't offer a headphone jack. You'll need the device-specific USB to headphone jack adapter that works with your phone.*

Remote wire jumpered to the +12V terminal

Example 2

Connecting a car amp to a home Bluetooth receiver

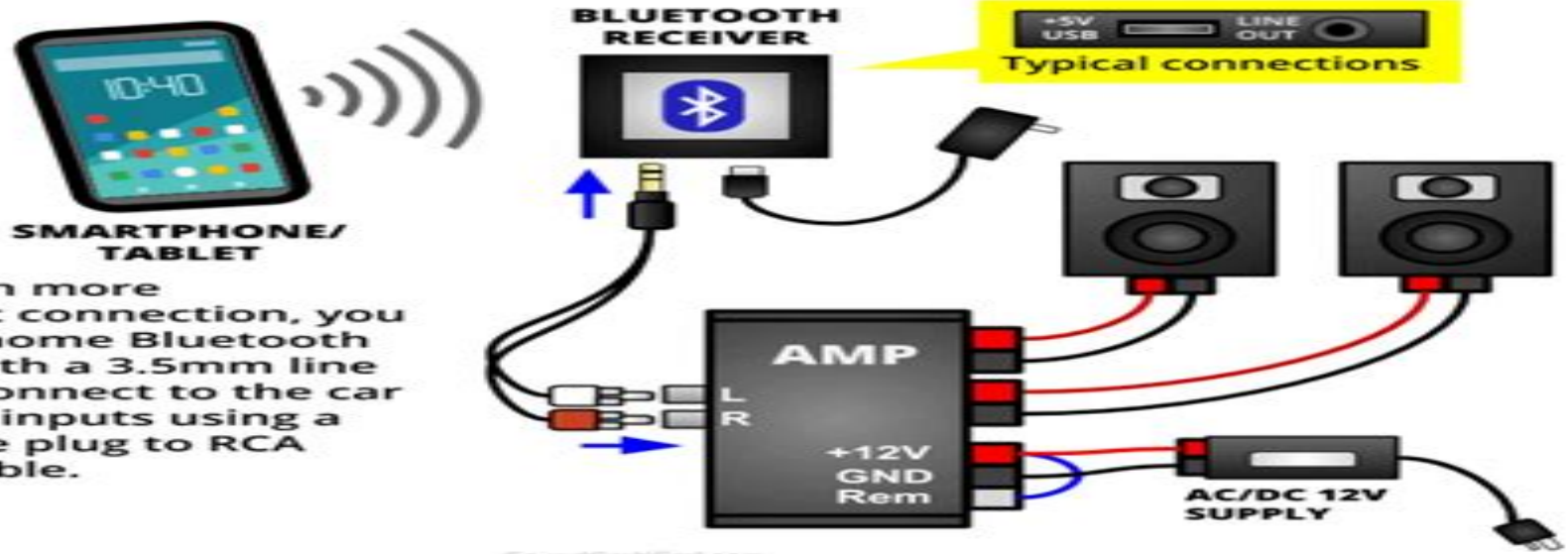

For an even more convenient connection, you can use a home Bluetooth receiver with a 3.5mm line out jack. Connect to the car amp's RCA inputs using a headphone plug to RCA adapter cable.

SoundCertified.com

How To Hook Up Amp In Car

Clifford Lane

How To Hook Up Amp In Car:

As recognized, adventure as skillfully as experience approximately lesson, amusement, as skillfully as harmony can be gotten by just checking out a book **How To Hook Up Amp In Car** also it is not directly done, you could recognize even more in this area this life, nearly the world.

We manage to pay for you this proper as without difficulty as easy showing off to get those all. We meet the expense of How To Hook Up Amp In Car and numerous ebook collections from fictions to scientific research in any way. accompanied by them is this How To Hook Up Amp In Car that can be your partner.

https://staging.conocer.cide.edu/book/book-search/fetch.php/elephant%20man%20one%20of%20us%20david%20lynch%20the.pdf

Table of Contents How To Hook Up Amp In Car

1. Understanding the eBook How To Hook Up Amp In Car
    - The Rise of Digital Reading How To Hook Up Amp In Car
    - Advantages of eBooks Over Traditional Books
2. Identifying How To Hook Up Amp In Car
    - Exploring Different Genres
    - Considering Fiction vs. Non-Fiction
    - Determining Your Reading Goals
3. Choosing the Right eBook Platform
    - Popular eBook Platforms
    - Features to Look for in an How To Hook Up Amp In Car
    - User-Friendly Interface
4. Exploring eBook Recommendations from How To Hook Up Amp In Car
    - Personalized Recommendations
    - How To Hook Up Amp In Car User Reviews and Ratings
    - How To Hook Up Amp In Car and Bestseller Lists

5. Accessing How To Hook Up Amp In Car Free and Paid eBooks
    - How To Hook Up Amp In Car Public Domain eBooks
    - How To Hook Up Amp In Car eBook Subscription Services
    - How To Hook Up Amp In Car Budget-Friendly Options
6. Navigating How To Hook Up Amp In Car eBook Formats
    - ePub, PDF, MOBI, and More
    - How To Hook Up Amp In Car Compatibility with Devices
    - How To Hook Up Amp In Car Enhanced eBook Features
7. Enhancing Your Reading Experience
    - Adjustable Fonts and Text Sizes of How To Hook Up Amp In Car
    - Highlighting and Note-Taking How To Hook Up Amp In Car
    - Interactive Elements How To Hook Up Amp In Car
8. Staying Engaged with How To Hook Up Amp In Car
    - Joining Online Reading Communities
    - Participating in Virtual Book Clubs
    - Following Authors and Publishers How To Hook Up Amp In Car
9. Balancing eBooks and Physical Books How To Hook Up Amp In Car
    - Benefits of a Digital Library
    - Creating a Diverse Reading Collection How To Hook Up Amp In Car
10. Overcoming Reading Challenges
    - Dealing with Digital Eye Strain
    - Minimizing Distractions
    - Managing Screen Time
11. Cultivating a Reading Routine How To Hook Up Amp In Car
    - Setting Reading Goals How To Hook Up Amp In Car
    - Carving Out Dedicated Reading Time
12. Sourcing Reliable Information of How To Hook Up Amp In Car
    - Fact-Checking eBook Content of How To Hook Up Amp In Car
    - Distinguishing Credible Sources
13. Promoting Lifelong Learning

    - Utilizing eBooks for Skill Development
    - Exploring Educational eBooks
14. Embracing eBook Trends
    - Integration of Multimedia Elements
    - Interactive and Gamified eBooks

How To Hook Up Amp In Car Introduction

In todays digital age, the availability of How To Hook Up Amp In Car books and manuals for download has revolutionized the way we access information. Gone are the days of physically flipping through pages and carrying heavy textbooks or manuals. With just a few clicks, we can now access a wealth of knowledge from the comfort of our own homes or on the go. This article will explore the advantages of How To Hook Up Amp In Car books and manuals for download, along with some popular platforms that offer these resources. One of the significant advantages of How To Hook Up Amp In Car books and manuals for download is the cost-saving aspect. Traditional books and manuals can be costly, especially if you need to purchase several of them for educational or professional purposes. By accessing How To Hook Up Amp In Car versions, you eliminate the need to spend money on physical copies. This not only saves you money but also reduces the environmental impact associated with book production and transportation. Furthermore, How To Hook Up Amp In Car books and manuals for download are incredibly convenient. With just a computer or smartphone and an internet connection, you can access a vast library of resources on any subject imaginable. Whether youre a student looking for textbooks, a professional seeking industry-specific manuals, or someone interested in self-improvement, these digital resources provide an efficient and accessible means of acquiring knowledge. Moreover, PDF books and manuals offer a range of benefits compared to other digital formats. PDF files are designed to retain their formatting regardless of the device used to open them. This ensures that the content appears exactly as intended by the author, with no loss of formatting or missing graphics. Additionally, PDF files can be easily annotated, bookmarked, and searched for specific terms, making them highly practical for studying or referencing. When it comes to accessing How To Hook Up Amp In Car books and manuals, several platforms offer an extensive collection of resources. One such platform is Project Gutenberg, a nonprofit organization that provides over 60,000 free eBooks. These books are primarily in the public domain, meaning they can be freely distributed and downloaded. Project Gutenberg offers a wide range of classic literature, making it an excellent resource for literature enthusiasts. Another popular platform for How To Hook Up Amp In Car books and manuals is Open Library. Open Library is an initiative of the Internet Archive, a non-profit organization dedicated to digitizing cultural artifacts and making them accessible to the public. Open Library hosts millions of books, including both public domain works and contemporary titles. It also allows users to

borrow digital copies of certain books for a limited period, similar to a library lending system. Additionally, many universities and educational institutions have their own digital libraries that provide free access to PDF books and manuals. These libraries often offer academic texts, research papers, and technical manuals, making them invaluable resources for students and researchers. Some notable examples include MIT OpenCourseWare, which offers free access to course materials from the Massachusetts Institute of Technology, and the Digital Public Library of America, which provides a vast collection of digitized books and historical documents. In conclusion, How To Hook Up Amp In Car books and manuals for download have transformed the way we access information. They provide a cost-effective and convenient means of acquiring knowledge, offering the ability to access a vast library of resources at our fingertips. With platforms like Project Gutenberg, Open Library, and various digital libraries offered by educational institutions, we have access to an ever-expanding collection of books and manuals. Whether for educational, professional, or personal purposes, these digital resources serve as valuable tools for continuous learning and self-improvement. So why not take advantage of the vast world of How To Hook Up Amp In Car books and manuals for download and embark on your journey of knowledge?

FAQs About How To Hook Up Amp In Car Books

How do I know which eBook platform is the best for me? Finding the best eBook platform depends on your reading preferences and device compatibility. Research different platforms, read user reviews, and explore their features before making a choice. Are free eBooks of good quality? Yes, many reputable platforms offer high-quality free eBooks, including classics and public domain works. However, make sure to verify the source to ensure the eBook credibility. Can I read eBooks without an eReader? Absolutely! Most eBook platforms offer webbased readers or mobile apps that allow you to read eBooks on your computer, tablet, or smartphone. How do I avoid digital eye strain while reading eBooks? To prevent digital eye strain, take regular breaks, adjust the font size and background color, and ensure proper lighting while reading eBooks. What the advantage of interactive eBooks? Interactive eBooks incorporate multimedia elements, quizzes, and activities, enhancing the reader engagement and providing a more immersive learning experience. How To Hook Up Amp In Car is one of the best book in our library for free trial. We provide copy of How To Hook Up Amp In Car in digital format, so the resources that you find are reliable. There are also many Ebooks of related with How To Hook Up Amp In Car. Where to download How To Hook Up Amp In Car online for free? Are you looking for How To Hook Up Amp In Car PDF? This is definitely going to save you time and cash in something you should think about. If you trying to find then search around for online. Without a doubt there are numerous these available and many of them have the freedom. However without doubt you receive whatever you purchase. An alternate way to get ideas is always to check another How To Hook Up Amp In Car. This

method for see exactly what may be included and adopt these ideas to your book. This site will almost certainly help you save time and effort, money and stress. If you are looking for free books then you really should consider finding to assist you try this. Several of How To Hook Up Amp In Car are for sale to free while some are payable. If you arent sure if the books you would like to download works with for usage along with your computer, it is possible to download free trials. The free guides make it easy for someone to free access online library for download books to your device. You can get free download on free trial for lots of books categories. Our library is the biggest of these that have literally hundreds of thousands of different products categories represented. You will also see that there are specific sites catered to different product types or categories, brands or niches related with How To Hook Up Amp In Car. So depending on what exactly you are searching, you will be able to choose e books to suit your own need. Need to access completely for Campbell Biology Seventh Edition book? Access Ebook without any digging. And by having access to our ebook online or by storing it on your computer, you have convenient answers with How To Hook Up Amp In Car To get started finding How To Hook Up Amp In Car, you are right to find our website which has a comprehensive collection of books online. Our library is the biggest of these that have literally hundreds of thousands of different products represented. You will also see that there are specific sites catered to different categories or niches related with How To Hook Up Amp In Car So depending on what exactly you are searching, you will be able tochoose ebook to suit your own need. Thank you for reading How To Hook Up Amp In Car. Maybe you have knowledge that, people have search numerous times for their favorite readings like this How To Hook Up Amp In Car, but end up in harmful downloads. Rather than reading a good book with a cup of coffee in the afternoon, instead they juggled with some harmful bugs inside their laptop. How To Hook Up Amp In Car is available in our book collection an online access to it is set as public so you can download it instantly. Our digital library spans in multiple locations, allowing you to get the most less latency time to download any of our books like this one. Merely said, How To Hook Up Amp In Car is universally compatible with any devices to read.

Find How To Hook Up Amp In Car :

elephant man one of us david lynch the
~~elegant sinners~~
elevator electric drives concepts and principles control and practice
~~electronics principles and applications basic skills in electricity and electronics~~
elegant small hotels a connoiseurs guide
elementary & intermediate algebra concepts and applications--a combined approach
electronic engineers reference

elementary statistics oe
elfking lady
electronic service management a public sector perspective
~~electronics eng manual volume 3~~
elevation to krsna consciousness
electronic media law and regulation
elephanta - the cave of shiva.
elementary algebra f/coll stu w/mathpro4.0 cd

How To Hook Up Amp In Car :

Student Workbook for Public Relations Writing Student Workbook for Public Relations Writing. Principles in Practice · More than 60 exercises link macro-level concepts and micro-level writing decisions to put ... Student Workbook for Public Relations Writing: Principles ... Book overview · More than 60 exercises link macro-level concepts and micro-level writing decisions to put principles into practice · Allows students to craft ... Public Relations Writing Principles in Practice We hope the workbook and textbook will give you a sense of what public relations writing is all about and enthuse you to consider a career in public relations. BUNDLE: Treadwell: Public Relations Writing 2e ... Public Relations Writing: Principles in Practice is a comprehensive core text that guides students from the most basic foundations of public relations writing ... Public Relations Writing Student Workbook This workbook gives students the opportunity to put their learning into practice. The text introduces four fictional clients for whom the students may 'work' as ... Public Relations Writing Student Workbook: Principles in ... Treadwell & Treadwell's Student Workbook gives students the opportunity to put their learning into practice. The workbook introduces four fictional clients, ... Public Relations Writing Student Workbook: Principles in ... Nov 1, 2004 — Description. This workbook gives students the opportunity to put their learning into practice. The text introduces four fictional clients ... Student Workbook for Public Relations Writing: Principles in ... Buy Student Workbook for Public Relations Writing: Principles in Practice / Edition 2 by Donald Treadwell, Jill B. Treadwell at Barnes & Noble. Student Workbook for Public Relations Writing: Principles ... Treadwell & Treadwell's Student Workbook gives students the opportunity to put their learning into practice. The workbook introduces four fictional clients, ... Public Relations Writing: Principles in Practice This comprehensive text begins with a discussion of the principles of research, planning, ethics, organizational culture, law, and design the foundations that ... MBTI For Team Building Activity Templates - TeamDynamics Learn how to use MBTI for team building with a free set of workshop templates to help you hold an impactful MBTI team dynamics and MBTI team building activity. Step-by-Step Guide on How To Use Myers-Briggs in Team ... Step 3: Apply knowledge in team building activities. ·

Play Ups & Downs Ups and Downs is an activity designed to learn more about teammates' motivators. · Have an ... Team Building with Myers-Briggs—Building a Home Out of ... One of my favorite activities is demonstrating this to naysayers who equate MBTI to astrology, so here's a simple team building activity you can use when ... Ideas for group/team building activities using MBTI Hi all,. I want to introduce my group of friends to the MBTI and they have all agreed to participate in some sort of activity altogether. MBTI Team Development Activities Feb 24, 2023 — 36 HR Training & Consultancy uses a variety of fun team building and team development learning activities as well as interesting games to help ... Free type exercises for practitioners - Myers-Briggs Apr 10, 2015 — A wide range of exercises for use in MBTI® based training sessions. These resources equip MBTI practitioners with group-based activities that ... Team Building Activities | CPP ... (MBTI) assessment and conduct a team building workshop around their assessment results. ... Specific reports such as the MBTI® Comparison Report: Work Styles ... MBTI Team Development Activity Jul 29, 2020 — MBTI team development activity to try in your virtual workshops. Designed to help groups increase self-awareness. Team building activities with MBTI types - marc-prager.co.uk Scavenger hunts: In this team building activity, participants work in teams to find and collect items or complete tasks on a list. This exercise will encourage ... Long Drive Mini Q Answer Key Fill Long Drive Mini Q Answer Key, Edit online. Sign, fax and printable from PC, iPad, tablet or mobile with pdfFiller Instantly. Try Now! The Long Drive DBQ The Long Drive DBQ quiz for 9th grade students. Find other quizzes for Social Studies and more on Quizizz for free! Long Drive Mini Q Answer Key Form - Fill Out and Sign ... Get long drive mini q document b answer key signed right from your mobile phone using these six steps: Enter signnow.com in the phone's internet browser and ... The Long Drive: Will you Re-Up? Flashcards Study with Quizlet and memorize flashcards containing terms like 5 Million, 1/3, brushpopper and more. The Long Drive, The Long Drive: Will You Re-Up Next Year? The Long Drive Document Based Question Vocabulary Learn with flashcards, games, and more — for free. Long Drive Dbq Pdf Answer Key - Colaboratory Fill each fillable field. Ensure that the info you fill in Long Drive Mini Q Document A Answer Key is updated and accurate. Include the date to the form using ... The Long Drive: Will You Re-Up Next Year? This Mini-Q offers a glimpse of this remarkable time in Texas history. The Documents: Document A: The Long Drive Trail (map). Document B: Cowboys By the Numbers ... Black Cowboys DBQ.docx - Long Drive Mini-Q Document B... View Black Cowboys DBQ.docx from SOCIAL STUDIES 101 at Southwind High School. Long Drive Mini-Q Document B Source: Chart compiled from various sources. Long Drive Mini-Q A typical cattle drive covered about 15 miles per day. Figuring a six-day week (no work on the Sabbath) and no delays, how many weeks did it take to go from ...