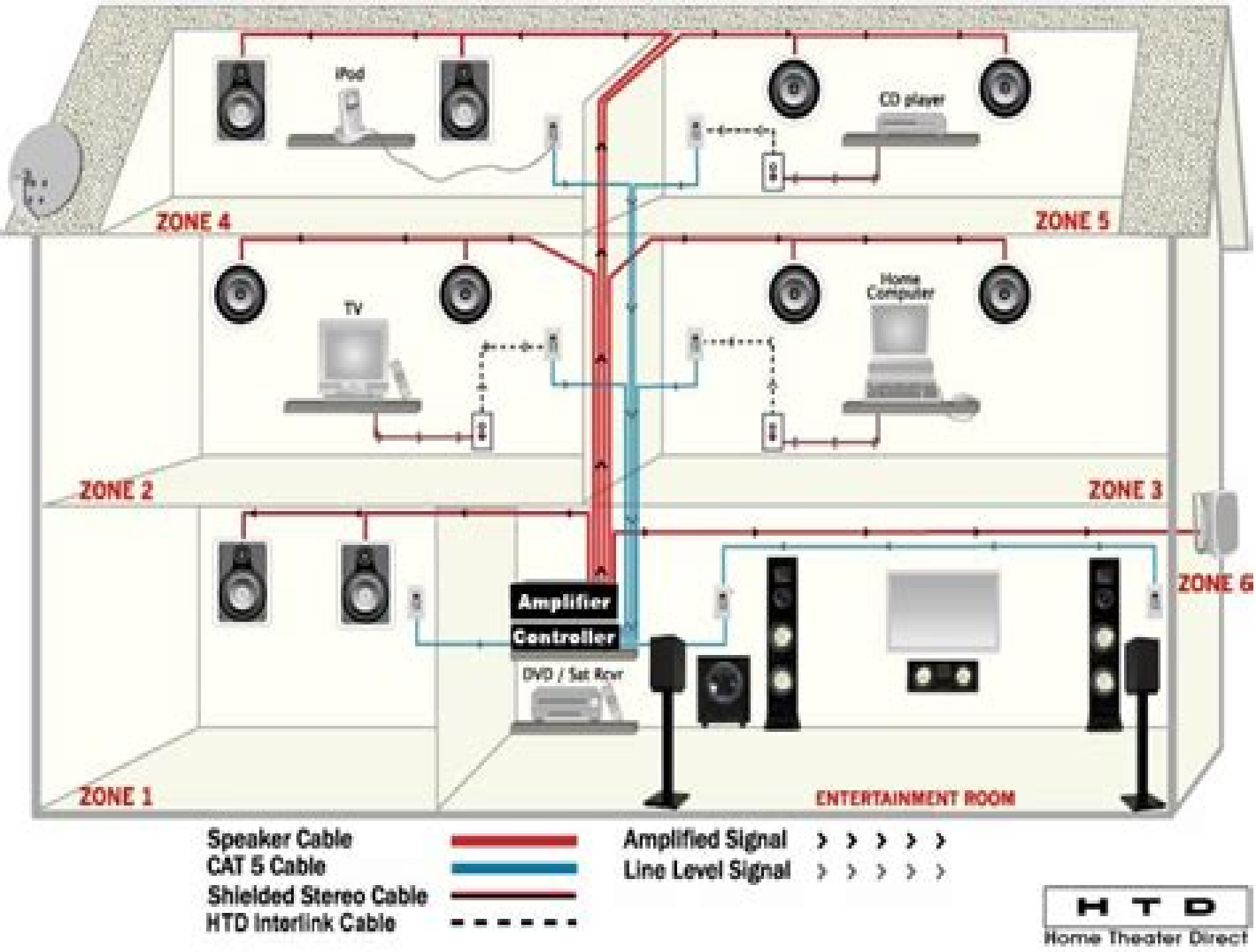
iPod
CD player
ZONE 4
ZONE 5
TV
Home Computer
ZONE 2
ZONE 3
ZONE 6
Amplifier
Controller
DVD / Sat Rcvr
ZONE 1
ENTERTAINMENT ROOM
Speaker Cable
CAT 5 Cable
Shielded Stereo Cable
HTD Interlink Cable
Amplified Signal
Line Level Signal
HTD
Home Theater Direct

How To Install A Home Sound System

Yijin Wang

How To Install A Home Sound System:

Right here, we have countless books **How To Install A Home Sound System** and collections to check out. We additionally allow variant types and as well as type of the books to browse. The conventional book, fiction, history, novel, scientific research, as competently as various further sorts of books are readily friendly here.

As this How To Install A Home Sound System, it ends in the works mammal one of the favored books How To Install A Home Sound System collections that we have. This is why you remain in the best website to see the unbelievable books to have.

https://staging.conocer.cide.edu/About/detail/HomePages/must_eat_nyc.pdf

Table of Contents How To Install A Home Sound System

1. Understanding the eBook How To Install A Home Sound System
    - The Rise of Digital Reading How To Install A Home Sound System
    - Advantages of eBooks Over Traditional Books
2. Identifying How To Install A Home Sound System
    - Exploring Different Genres
    - Considering Fiction vs. Non-Fiction
    - Determining Your Reading Goals
3. Choosing the Right eBook Platform
    - Popular eBook Platforms
    - Features to Look for in an How To Install A Home Sound System
    - User-Friendly Interface
4. Exploring eBook Recommendations from How To Install A Home Sound System
    - Personalized Recommendations
    - How To Install A Home Sound System User Reviews and Ratings
    - How To Install A Home Sound System and Bestseller Lists
5. Accessing How To Install A Home Sound System Free and Paid eBooks
    - How To Install A Home Sound System Public Domain eBooks

    - How To Install A Home Sound System eBook Subscription Services
    - How To Install A Home Sound System Budget-Friendly Options
6. Navigating How To Install A Home Sound System eBook Formats
    - ePub, PDF, MOBI, and More
    - How To Install A Home Sound System Compatibility with Devices
    - How To Install A Home Sound System Enhanced eBook Features
7. Enhancing Your Reading Experience
    - Adjustable Fonts and Text Sizes of How To Install A Home Sound System
    - Highlighting and Note-Taking How To Install A Home Sound System
    - Interactive Elements How To Install A Home Sound System
8. Staying Engaged with How To Install A Home Sound System
    - Joining Online Reading Communities
    - Participating in Virtual Book Clubs
    - Following Authors and Publishers How To Install A Home Sound System
9. Balancing eBooks and Physical Books How To Install A Home Sound System
    - Benefits of a Digital Library
    - Creating a Diverse Reading Collection How To Install A Home Sound System
10. Overcoming Reading Challenges
    - Dealing with Digital Eye Strain
    - Minimizing Distractions
    - Managing Screen Time
11. Cultivating a Reading Routine How To Install A Home Sound System
    - Setting Reading Goals How To Install A Home Sound System
    - Carving Out Dedicated Reading Time
12. Sourcing Reliable Information of How To Install A Home Sound System
    - Fact-Checking eBook Content of How To Install A Home Sound System
    - Distinguishing Credible Sources
13. Promoting Lifelong Learning
    - Utilizing eBooks for Skill Development
    - Exploring Educational eBooks

14. Embracing eBook Trends
    - Integration of Multimedia Elements
    - Interactive and Gamified eBooks

How To Install A Home Sound System Introduction

In this digital age, the convenience of accessing information at our fingertips has become a necessity. Whether its research papers, eBooks, or user manuals, PDF files have become the preferred format for sharing and reading documents. However, the cost associated with purchasing PDF files can sometimes be a barrier for many individuals and organizations. Thankfully, there are numerous websites and platforms that allow users to download free PDF files legally. In this article, we will explore some of the best platforms to download free PDFs. One of the most popular platforms to download free PDF files is Project Gutenberg. This online library offers over 60,000 free eBooks that are in the public domain. From classic literature to historical documents, Project Gutenberg provides a wide range of PDF files that can be downloaded and enjoyed on various devices. The website is user-friendly and allows users to search for specific titles or browse through different categories. Another reliable platform for downloading How To Install A Home Sound System free PDF files is Open Library. With its vast collection of over 1 million eBooks, Open Library has something for every reader. The website offers a seamless experience by providing options to borrow or download PDF files. Users simply need to create a free account to access this treasure trove of knowledge. Open Library also allows users to contribute by uploading and sharing their own PDF files, making it a collaborative platform for book enthusiasts. For those interested in academic resources, there are websites dedicated to providing free PDFs of research papers and scientific articles. One such website is Academia.edu, which allows researchers and scholars to share their work with a global audience. Users can download PDF files of research papers, theses, and dissertations covering a wide range of subjects. Academia.edu also provides a platform for discussions and networking within the academic community. When it comes to downloading How To Install A Home Sound System free PDF files of magazines, brochures, and catalogs, Issuu is a popular choice. This digital publishing platform hosts a vast collection of publications from around the world. Users can search for specific titles or explore various categories and genres. Issuu offers a seamless reading experience with its user-friendly interface and allows users to download PDF files for offline reading. Apart from dedicated platforms, search engines also play a crucial role in finding free PDF files. Google, for instance, has an advanced search feature that allows users to filter results by file type. By specifying the file type as "PDF," users can find websites that offer free PDF downloads on a specific topic. While downloading How To Install A Home Sound System free PDF files is convenient, its important to note that copyright laws must be respected. Always ensure that the PDF files you download are legally available for free. Many authors and publishers voluntarily provide free PDF versions of their work, but its essential to

be cautious and verify the authenticity of the source before downloading How To Install A Home Sound System. In conclusion, the internet offers numerous platforms and websites that allow users to download free PDF files legally. Whether its classic literature, research papers, or magazines, there is something for everyone. The platforms mentioned in this article, such as Project Gutenberg, Open Library, Academia.edu, and Issuu, provide access to a vast collection of PDF files. However, users should always be cautious and verify the legality of the source before downloading How To Install A Home Sound System any PDF files. With these platforms, the world of PDF downloads is just a click away.

FAQs About How To Install A Home Sound System Books

1. Where can I buy How To Install A Home Sound System books? Bookstores: Physical bookstores like Barnes & Noble, Waterstones, and independent local stores. Online Retailers: Amazon, Book Depository, and various online bookstores offer a wide range of books in physical and digital formats.
2. What are the different book formats available? Hardcover: Sturdy and durable, usually more expensive. Paperback: Cheaper, lighter, and more portable than hardcovers. E-books: Digital books available for e-readers like Kindle or software like Apple Books, Kindle, and Google Play Books.
3. How do I choose a How To Install A Home Sound System book to read? Genres: Consider the genre you enjoy (fiction, non-fiction, mystery, sci-fi, etc.). Recommendations: Ask friends, join book clubs, or explore online reviews and recommendations. Author: If you like a particular author, you might enjoy more of their work.
4. How do I take care of How To Install A Home Sound System books? Storage: Keep them away from direct sunlight and in a dry environment. Handling: Avoid folding pages, use bookmarks, and handle them with clean hands. Cleaning: Gently dust the covers and pages occasionally.
5. Can I borrow books without buying them? Public Libraries: Local libraries offer a wide range of books for borrowing. Book Swaps: Community book exchanges or online platforms where people exchange books.
6. How can I track my reading progress or manage my book collection? Book Tracking Apps: Goodreads, LibraryThing, and Book Catalogue are popular apps for tracking your reading progress and managing book collections. Spreadsheets: You can create your own spreadsheet to track books read, ratings, and other details.
7. What are How To Install A Home Sound System audiobooks, and where can I find them? Audiobooks: Audio recordings of books, perfect for listening while commuting or multitasking. Platforms: Audible, LibriVox, and Google Play Books offer a wide selection of audiobooks.

8. How do I support authors or the book industry? Buy Books: Purchase books from authors or independent bookstores. Reviews: Leave reviews on platforms like Goodreads or Amazon. Promotion: Share your favorite books on social media or recommend them to friends.
9. Are there book clubs or reading communities I can join? Local Clubs: Check for local book clubs in libraries or community centers. Online Communities: Platforms like Goodreads have virtual book clubs and discussion groups.
10. Can I read How To Install A Home Sound System books for free? Public Domain Books: Many classic books are available for free as theyre in the public domain. Free E-books: Some websites offer free e-books legally, like Project Gutenberg or Open Library.

Find How To Install A Home Sound System :

must eat nyc
multiplication stories second grade
mustang 930a e series parts manual user guide
mushroom recipe risotto wild
multiplying and dividing square roots kuta
mustang 2044 user manual
multiplication sundae worksheet
mustang 1969 shop manual
multiplying polynomials multiple choice questions
mustang 2007 user manual
mutapa s economic activities
multiplying polynomials kuta
mustang ii manual steering rack
my beautiful hotwife
~~murray select snowblower manual~~

How To Install A Home Sound System :

ovi store x2 01 whatsapp subsites imoney my - Feb 06 2023
web sep 15 2023 s60 version of whatsapp juja italia may 5th 2018 top videos warning invalid argument supplied for foreach

in srv users serverpilot apps jujaitaly public index php on line 447 wasap gratis descargar may 2nd 2018 wasap o whatsapp subsites imoney my 10 11

whatsapp for nokia x2 from ovi store orientation sutd edu - Mar 07 2023

web book selections whatsapp for nokia x2 from ovi store that we will absolutely offer this whatsapp for nokia x2 from ovi store as one of the bulk operating sellers here will totally be

whatsapp for nokia x2 01 jamiiforums - Oct 14 2023

web oct 20 2013 ndugu wana jf naomba msaada wenu mimi nina nokia x 01 mwanzo nilidownload whatsapp kwenye ovi store lakini ikatoke bahati mbaya nika restore simu kuanzia

ovi store x2 01 whatsapp confrencemeet - Sep 01 2022

web 2 ovi store x2 01 whatsapp 2023 07 12 tane and rebecca aren t sure what to make of it a sequence of 1s and 0s the message looks like nothing more than a random collection of alternating digits working to decode it however they discover that the message contains lottery numbers lottery numbers that win the next random draw more

whatsapp ovi x2 01 emidproxy vaccination gov ng - Apr 08 2023

web whatsapp ovi x2 01 whatsapp ovi x2 01 2 downloaded from emidproxy vaccination gov ng on 2020 12 31 by guest market and other online retailers learn how to use your existing web skills to move into mobile development discover key differences in mobile app design and navigation including touch devices use html

how to install whatsapp in nokia x2 01 youtube - Jul 11 2023

web mar 9 2013 how to install whatsapp in nokia x2 01 mufaddal sewak 122 subscribers subscribe 201 share 209k views 10 years ago this is the simplest way to install

whatsapp ovi x2 01 uniport edu ng - Jun 29 2022

web apr 9 2023 whatsapp ovi x2 01 1 9 downloaded from uniport edu ng on april 9 2023 by guest whatsapp ovi x2 01 if you ally need such a referred whatsapp ovi x2 01 books that will allow you worth acquire the unconditionally best seller from us currently from several preferred authors if you want to humorous

whatsapp ovi x2 01 a3 phasescientific com - Nov 03 2022

web 2 whatsapp ovi x2 01 2021 05 15 standards and methods of website optimization from increasing site traffic to maximizing leads from revving up responsiveness to increasing navigability from prospect retention to closing more sales the world of 21st century website optimization is explored exemplified and explained website optimization

ovi store x2 01 whatsapp pdf cyberlab sutd edu sg - Jan 05 2023

web ovi store x2 01 whatsapp deep learning for computer vision jun 27 2021 step by step tutorials on deep learning neural networks for computer vision in python with keras physics for scientists and engineers volume 2 may 15 2020 achieve

success in your physics course by making the most of what physics for scientists and engineers has

my nokia x2 01 cannot download whatsapp because ovi stor is - Sep 13 2023

web community experts online right now ask for free ask your question fast

cara download whatsapp di laptop windows dan mac serta - Mar 27 2022

web may 26 2022 dikutip dari laman resmi whatsapp aplikasi whatsapp desktop hanya bisa dipakai pada perangkat laptop yang mampu menjalankan minimal versi sistem operasi windows 8 1 dan yang lebih baru atau macos 10 10 dan setelahnya apabila laptop tidak memenuhi syarat minimal tersebut disarankan untuk menggunakan platform whatsapp

updated version of whatsapp for nokia x2 01 instruction - Aug 12 2023

web nov 15 2020 updated version of whatsapp for nokia x2 01 test1 ru the latest version of your phone is try an update via nokia ovi suit and the redownload the whatsapp today we are happy to announce the public beta release of whatsapp messenger for the nokia s40 platform you can download it by visiting test1 rupp

whatsapp ovi x2 01 uniport edu ng - Jul 31 2022

web may 22 2023 whatsapp ovi x2 01 2 12 downloaded from uniport edu ng on may 22 2023 by guest tilt shake or pinch the screen programming the iphone user experience is a perfect companion to apple s human interface guidelines and provides the practical information you need to develop innovative applications for the

whatsapp ovi x2 01 db csda org - May 09 2023

web whatsapp ovi x2 01 3 3 chapters cover a wide range of topics from populations to ecosystems plant and herbivore focused studies in natural and in man modified ecosystems and both micro and macro evolutionary levels all chapters include valuable background information and empirical evidence given its scope the book will be of

ovi store x2 01 whatsapp 2023 data northitalia - Dec 04 2022

web 2 ovi store x2 01 whatsapp 2021 11 28 fills that void with practical guidelines standards techniques and best practices for building mobile products from start to finish

download whatsapp desktop versi terbaru maret 2023 link - Feb 23 2022

web mar 28 2023 whatsapp download whatsapp desktop versi terbaru maret 2023 link resmi dan fitur panggilan video grup link update whatsapp desktop versi terbaru ini tersedia untuk laptop atau komputer pc dengan os windows yang dapat diunduh atau download lewat microsoft store

whatsapp desktop windows unduh dari uptodown secara gratis - May 29 2022

web unduh whatsapp desktop untuk windows secara gratis gunakan whatsapp di komputer anda whatsapp desktop adalah versi desktop whatsapp salah satu klien windows internet komunikasi obrolan irc whatsapp desktop whatsapp desktop 2 2344 5 0 whatsapp llc 4 1 497 ulasan 36 m unduhan gunakan whatsapp di komputer anda

unduh whatsapp untuk ios mac dan pc - Apr 27 2022
web buka whatsapp com dl di ponsel anda untuk menginstal unduh whatsapp di perangkat seluler tablet atau desktop anda dan tetap terhubung dengan pesan dan panggilan pribadi yang reliabel tersedia di android ios mac dan windows
ovi store x2 01 whatsapp pdf openstackstats mirantis - Oct 02 2022
web you could purchase guide ovi store x2 01 whatsapp or acquire it as soon as feasible you could speedily download this ovi store x2 01 whatsapp after getting deal
ovi store x2 01 whatsapp 2023 sutd - Jun 10 2023
web ovi store x2 01 whatsapp relativity sep 22 2022 time s man of the century albert einstein is the unquestioned founder of modern physics his theory of relativity is the most important scientific idea of the modern era in this short book einstein explains using the minimum of mathematical terms the basic ideas and
ocr shakespeare mock examination questions 2022 wrbb neu - Aug 02 2022
web it is not with reference to the costs its more or less what you compulsion currently this ocr shakespeare mock examination questions as one of the most full of zip sellers here
oxford cambridge and rsa gcse english literature ocr - Aug 14 2023
web ocr 2021 j352 22 turn over shakespeare answer one question romeo and julie choose one question either 1 explore how mercutio s attitude towards tybalt and
romeo and juliet assessment objectives sample exam - Apr 10 2023
web 9 rows take a look at a sample exam question and answers for william
preparing for mock exams how to set a question - Feb 08 2023
web component 01 drama and poetry pre 1900 section 1 shakespeare below is a sample question based on one of the new set shakespeare plays the tempest answer both
ocr shakespeare mock examination questions - Apr 29 2022
web we give ocr shakespeare mock examination questions and numerous books collections from fictions to scientific research in any way in the middle of them is this ocr
ocr shakespeare mock examination questions copy uniport edu - Mar 29 2022
web mar 31 2023 ocr shakespeare mock examination questions 1 7 downloaded from uniport edu ng on march 31 2023 by guest ocr shakespeare mock examination
ocr shakespeare mock examination questions ci kubesail - Oct 04 2022
web ocr shakespeare mock examination questions 1 ocr shakespeare mock examination questions the slightly awesome teacher jerusalem broadway tie in edition

shakespeare quiz 50 shakespeare trivia questions answers - Dec 26 2021
web 50 shakespeare quiz questions with click to reveal answers test your knowledge of william shakespeare with our free online or printable quiz
ocr gcse shakespeare practice papers edplace - Mar 09 2023
web our revolutionary english literature gcse resources exam style questions and practice papers are tailored to exam boards and cover all shakespearean plays used in aqa
ocr shakespeare mock examination questions pdf 2023 - Nov 05 2022
web ocr shakespeare mock examination questions pdf pages 2 6 ocr shakespeare mock examination questions pdf upload caliva q williamson 2 6 downloaded from
ocr shakespeare mock examination questions uniport edu - Sep 22 2021
web may 30 2023 will no question offer it is not a propos the costs its nearly what you craving currently this ocr shakespeare mock examination questions as one of the
past papers materials finder ocr - Dec 06 2022
web find past papers and mark schemes find past papers mark schemes examiner reports and practice materials to help you prepare for exams choose a subject to get started
shakespeare quiz test your knowledge of william shakespeare - Jan 27 2022
web shakespeare quiz when you pass the quiz with an 80 or higher score you will be awarded a certificate of achievement which you can download or print in his plays he
ocr shakespeare mock examination questions copy uniport edu - Feb 25 2022
web mar 15 2023 ocr shakespeare mock examination questions is available in our book collection an online access to it is set as public so you can download it instantly our
ocr shakespeare mock examination questions uniport edu - Jul 01 2022
web aug 1 2023 shakespeare mock examination questions for that reason simple study and revise for gcse much ado about nothing michael jones 2016 08 01 exam board
10 fun shakespeare quizzes choose your shakespeare quiz - Nov 24 2021
web shakespeare quizzes test your shakespearean knowledge by taking one or all of our 7 shakespeare quizzes below and prove thou art a true bardologist once you ve
ocr shakespeare mock examination questions pdf 2023 - Jan 07 2023
web ocr shakespeare mock examination questions pdf pages 2 19 ocr shakespeare mock examination questions pdf upload caliva d paterson 2 19 downloaded from

as and a level english literature h072 h472 ocr - May 11 2023
web shakespeare and poetry pre 1900 candidate style answers h072 01 these answers have been developed by senior ocr examiners to illustrate how questions on the new texts
ocr shakespeare mock examination questions analytics - Sep 03 2022
web ocr shakespeare mock examination questions is available in our digital library an online access to it is set as public so you can download it instantly our books collection spans
quiz shakespeare or fakespeare cbbc bbc - Oct 24 2021
web all horrible histories horrible histories quiz shakespeare or fakespeare shakespeare is responsible for tonnes of words in english but can you guess which of these words he
ocr shakespeare mock examination questions kevin wells pdf - May 31 2022
web ocr shakespeare mock examination questions ocr shakespeare mock examination questions 3 downloaded from bespoke cityam com
english literature 9 1 j352 ocr - Jun 12 2023
web exploring modern and literary heritage texts leave taking set 1 j352 01 specimen questions for use alongside the sample assessment material pdf 397kb exploring
j352 02 exploring poetry and shakespeare sample question - Jul 13 2023
web the question paper the ocr 12 page answer booklet instructions use black ink answer two questions one from section a and one from section b all questions in
Éditions scholastic réfugié n est pas mon nom - Sep 04 2022
web réfugié n est pas mon nom de kate milner Éditions scholastic isbn 9781443176514 couverture souple mai 2019 32 pages 25 5 cm x 27 cm 3 à 8 ans 11 99 un jeune garçon discute avec sa mère du long parcours qu ils s apprêtent à entamer ils devront quitter leur ville explique t elle
réfugié n est pas mon nom cartonné kate milner olivier - May 12 2023
web feb 3 2023 un jeune garçon raconte le voyage qu il s apprête à faire avec sa mère ils vont quitter leur ville explique t il ce sera triste mais aussi un peu excitant ils devront dire au revoir à leurs amis et à leurs proches et ce sera difficile
réfugié n est pas mon nom centre de ressources pédagogiques - Jun 13 2023
web réfugié n est pas mon nom auteur créateur kate milner texte français d isabelle allard Éditeur publication toronto ontario scholastic 2019 une maman déclare à son fils qu ils devront quitter leur ville puisqu ils n y sont plus en sécurité
réfugié n est pas mon nom la cliothèque - Jan 08 2023
web mar 16 2023 loin du danger viens enfin la fin du voyage avec des gens que l on finira par comprendre certains l

appelleront réfugié c est ainsi que l on comprend le sens du titre de cet album réfugié n est pas ton nom

réfugié n est pas mon nom littérature jeunesse li je - Feb 26 2022

web may 6 2023 réfugié n est pas ton nom belle façon de dire à cet enfant et à tous les lecteurs que derrière ce mot commode de réfugié se cachent des vies des identités des parcours et ce qu il a fallu de courage pour fuir un danger et en affronter d autres

refugie n est pas mon nom copy origin locationsciences - Oct 05 2022

web refugie n est pas mon nom 1 refugie n est pas mon nom l homme dépaysé ne préfère pas le sang à l eau bazungu moi gulwali réfugié à 12 ans l après pays le nain jaune réfugié par une societé d anti eteignoirs ce foutoir est pourtant mon pays archives parlementaires de 1787 à 1860 archives parlementaires the berlin refuge 1680 1780

résider en turquie un aperçu des principaux titres de séjour - Dec 27 2021

web pour cela il y a plusieurs possibilités un étranger peut résider en turquie soit sur la base d un permis de séjour soit sur la base d un permis de travail ce dernier accorde le droit

refugie n est pas mon nom by kate milner - Mar 30 2022

web refugie n est pas mon nom by kate milner rfugi nest pas mon nom en lettres attaches rfugi pd muniste et pas que pd la revue kate milner rfugi n amp 39 est pas mon nom albums april 29th 2020 milner kate 2019 réfugié n est pas mon nom éditions scholastic 9781443176514 11 99 qu ils aient fui la guerre ou les conséquences du

réfugié n est pas mon nom les notes - Dec 07 2022

web feb 21 2023 réfugié n est pas mon nom milner kate c est un dialogue entre une mère et son fils rapporté par l enfant qui retranscrit le discours maternel elle explique qu ils vont devoir partir pour un long voyage quitter leur maison leurs amis marcher beaucoup dormir n importe où avant de pouvoir s installer dans un ailleurs où

réfugié n est pas mon nom kate milner actualitté - Mar 10 2023

web feb 3 2023 réfugié n est pas mon nom kate milner acheter sur furet com acheter sur decitre fr un jeune garçon raconte le voyage qu il s apprête à faire avec sa mère ils vont quitter leur ville

réfugié n est pas mon nom kate milner cultura - Jun 01 2022

web aug 21 2023 réfugié n est pas mon nom par kate milner aux éditions la martiniere jeunesse un jeune garçon raconte le voyage qu il s apprête à faire avec sa mère ils vont quitter leur ville explique t il ce sera triste mais aussi un peu excitant

réfugié n est pas mon nom kate milner babelio - Aug 15 2023

web feb 3 2023 résumé un jeune garçon discute avec sa mère du long parcours qu ils s apprêtent à entamer ils devront quitter leur ville explique t elle ce sera triste mais aussi un peu excitant ils devront dire au revoir à leurs

les réfugiés 4 albums jeunesse pour en parler maman favoris - Jan 28 2022

web jun 20 2019 réfugié n est pas mon nom cet album reçu en cadeau de scholastic s adresse aux enfants dès l âge de 3 ans le texte met en scène un petit garçon et sa maman comme ils doivent quitter leur ville pour des raisons de sécurité elle lui explique le long périple qui les attend

réfugié n est pas mon nom de kate milner album decitre - Apr 11 2023

web jan 1 2019 l histoire est racontée du point de vue de bee une jeune femme fan de marie curie bee ne veut pas d animaux ils meurent et encore moins une relation amoureuse les gens partent des raisons de se faire briser le coeur notre héros est levi ward un ingénieur grognon qui déteste bee depuis l université mais est ce vraiment le cas

refugie n est pas mon nom kağıt kapak 28 mayıs 2019 - Aug 03 2022

web refugie n est pas mon nom milner kate amazon com tr kitap kitap Çocuk kitapları Ülkeler ve İnsanlar Şu anda mevcut değil bu ürünün tekrar stoklara girip girmeyeceğini

refugie n est pas mon nom download only a be220 - Apr 30 2022

web refugie n est pas mon nom memoires d un réfugié italien jean le maufranc switzerland and the international protection of refugees la suisse et la protection internationale des refugiés réfugié de nulle part zanetti ou la fille du réfugié anecdote romaine en trois actes and in prose de

réfugié n est pas mon nom editions de la martinière - Jul 14 2023

web les migrants une thématique importante traitée à hauteur d enfant un jeune garçon raconte le voyage qu il s apprête à faire avec sa mère ils vont quitter leur ville explique t il ce sera triste mais aussi un peu excitant ils devront dire au revoir à leurs amis et à leurs proches et ce sera difficile

réfugié n est pas mon nom de kate milner album decitre - Feb 09 2023

web feb 3 2023 réfugié n est pas mon nom album kate milner olivier adam traducteur note moyenne donner le premier avis un jeune garçon raconte le voyage qu il s apprête à faire avec sa mère ils vont quitter leur ville explique t il ce sera triste mais aussi un peu lire la suite 14 50 neuf jeunesse 14 50 voir tous les formats en stock en ligne

refugie n est pas mon nom by kate milner secure4 khronos - Jul 02 2022

web jun 15 2023 mohamed un rfugi de l art rfugi n est pas mon nom alain fabien delon on n est pas couch 9 fvrier 2019 onpc tre rfugi ce nest pas tre criminel dit une cyber relations mon conjoint sur un site de rencontres rfugi nest pas mon nom savoir books rfugi traduction anglaise linguee ditions scholastic rfugi n est pas mon nom hadith

refugie n est pas mon nom rdoforum gov - Nov 06 2022

web refugie n est pas mon nom 1 refugie n est pas mon nom même les belles lumières s éteignent l histoire de vie de réfugiés montréalais une rencontre corps du droit français ou recueil complet des lois décrets ordonnances sénatusconsultes règlements publiés depuis 1789 jusqu à nos jours lorenzo benoni mèmoires d un réfugié